Dead-On Miters **EVERY TIME!**

**INSTALL HARDWARE** Like the Pros

Router Table **MUST-HAVES!**

# Woodsmith®

Woodsmith.com

Vol. 36 / No. 214

Woodsmith 35 YEARS 1979 - 2014

## A TRUE HEIRLOOM: CRAFTSMAN-STYLE BRIDE'S CHEST

**ALSO:**

**Router Table Technique:** Crown Molding

**Q & A: Flush Trimming** Tips & Tricks

**Clean-Cutting** Router Bits

**The Secret to** Gap-Free Edge Joints

A Publication of August Home Publishing

Woodsmith®

**PUBLISHER** Donald B. Peschke

**EDITOR** Bryan Nelson
**MANAGING EDITOR** Vincent Ancona
**SENIOR EDITOR** Wyatt Myers
**ASSOCIATE EDITOR** Dennis Perkins
**ASSISTANT EDITOR** Robert Kemp
**CONTRIBUTING EDITORS** Phil Huber, Randall A. Maxey, Dennis Volz

**EXECUTIVE ART DIRECTOR** Todd Lambirth
**SENIOR ILLUSTRATORS** Harlan V. Clark, Erich Lage, David Kallemyn
**SENIOR GRAPHIC DESIGNER** Bob Zimmerman
**GRAPHIC DESIGNER** Becky Kralicek
**GRAPHIC DESIGN INTERN** Ryan C. Meier
**CONTRIBUTING ILLUSTRATORS** Dirk Ver Steeg, Peter J. Larson

**CREATIVE DIRECTOR** Ted Kralicek
**SENIOR PROJECT DESIGNERS** Chris Fitch, Jim Downing
**PROJECT DESIGNER/BUILDER** John Doyle
**CAD SPECIALIST** Steve Johnson
**SHOP CRAFTSMEN** Steve Curtis, Dana Myers
**SENIOR PHOTOGRAPHERS** Crayola England, Dennis Kennedy
**ASSOCIATE STYLE DIRECTOR** Rebecca Cunningham
**SENIOR ELECTRONIC IMAGE SPECIALIST** Allan Ruhnke
**PRODUCTION ASSISTANT** Minniette Johnson
**VIDEO EDITOR/DIRECTOR** Mark Hayes
**VIDEO PRODUCTION SPECIALIST** Patrick McDaniel

**Woodsmith**® (ISSN 0164-4114) is published bimonthly by August Home Publishing Company, 2200 Grand Ave. Des Moines, IA 50312.
**Woodsmith**® is a registered trademark of August Home Publishing.
**Copyright**© 2014 August Home Publishing Company. All rights reserved.
**Subscriptions:** Single copy: $4.95.
**Canadian Subscriptions:** Canada Post Agreement No. 40038201. Send change of address information to PO Box 881, Station Main, Markham, ON L3P 8M6. Canada BN 84597 5473 RT
**Periodicals Postage Paid** at Des Moines, IA, and at additional offices.
**Postmaster:** Send change of address to *Woodsmith*, Box 37106, Boone, IA 50037-0106.

**WoodsmithCustomerService.com**

**ONLINE SUBSCRIBER SERVICES**

- **VIEW** your account information
- **RENEW** your subscription
- **CHECK** on a subscription payment
- **PAY** your bill
- **CHANGE** your mailing or e-mail address
- **VIEW/RENEW** your gift subscriptions
- **TELL US** if you've missed an issue

**CUSTOMER SERVICE** **Phone: 800-333-5075**

**SUBSCRIPTIONS**
Customer Service
P.O. Box 842
Des Moines, IA 50304-9961
subscriptions@augusthome.com

**EDITORIAL**
Woodsmith Magazine
2200 Grand Avenue
Des Moines, IA 50312
woodsmith@woodsmith.com

AUGUST HOME PUBLISHING COMPANY

Printed in U.S.A.

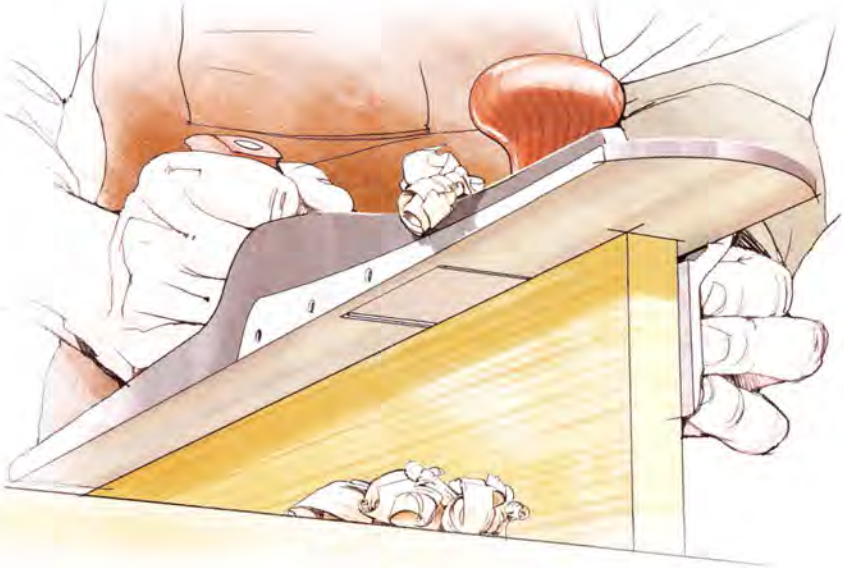

from the editor

# Sawdust

***I often get asked*** where we come up with the ideas for the projects in *Woodsmith*. One answer is that we look to period furniture pieces for ideas. Take the bride's chest that's featured on the cover of this issue, for example. The inspiration for this Craftsman-style project was a piece originally designed by Gustav Stickley over 100 years ago.

While I really enjoy building period pieces like this, they always bring up a question during the planning phase: How closely should we stick with the original design? There are usually a few people here who argue for a strict reproduction, down to the last detail. And then there are those who feel that making changes to a design is what woodworking is all about — especially if those changes make the project stronger, easier to build, or more visually appealing (of course, that last one is often a matter of opinion).

In the case of the bride's chest, the original version had some interesting iron hinges and corner straps that give the project a distinctive look. We all really loved the hardware, but finding something practical that matched proved to be a challenge. So we had to come up with a shop-made alternative that still looked appropriate for the original design. While the solution we chose might not be an exact match, I think it looks great and really adds a lot to the look of the finished project. I hope you agree.

**Changes.** Speaking of design, we've had a couple changes in our design group recently. Dana Meyers has joined us as a shop craftsman. You might recognize the name. He's the father of Wyatt, one of our editors. Dana's taking over for Steve Johnson, who's now our CAD specialist.

Bryan

# contents

No. 214 August/September 2014

## Departments

from our readers
**Tips & Techniques . . . . . 4**

all about
**Working with Metal. . . . . 8**

tools of the trade
**Miter Boxes: Dead-On Results . . 10**

jigs & fixtures
**Pro Hardware Installation . . . . . 12**

techniques from our shop
**Router Table Crown Molding . . . 14**

tips from our shop
**Shop Notebook . . . . . 30**

working with tools
**Bits for Tearout-Free Routing. . . . 42**

woodworking technique
**Gap-Free Edge Joints. . . . . 44**

woodworking essentials
**Router Table Must-Haves. . . . . 46**

in the mailbox
**Q & A . . . . . 50**

## Projects

weekend project
**Cheese & Cracker Tray . . . . . 16**

There's a lot of great woodworking packed into this small serving tray. Best of all, it's a project that's a snap to knock out in a weekend — with time to spare.

designer project
**Tower Bookcase . . . . . 22**

The small size and classic design of this bookcase mean it'll fit just about any size or style of room. And the painted finish lets you use low-cost materials to build it.

heirloom project
**Craftsman-Style Bride's Chest . . . . . 32**

You don't have to be a newlywed to love the look of this stylish storage chest. Sturdy materials and construction make it a family heirloom for future generations.

from our readers

# Tips & Techniques

## Small Parts Vise

Holding odd-shaped parts in a standard woodworking vise can be difficult. But spending the money on a dedicated carver's vise wasn't an option. Instead, I built this adjustable stand for an "F-style" bar clamp to serve as my carver's vise.

**PLYWOOD CONSTRUCTION.** With the exception of the cleat that attaches to the base, the rest of the clamp stand parts are made from plywood. A stepped slot cut in the base (detail 'b') allows the clamp arm to pivot. This is handy for repositioning your workpiece without having to move the entire stand. A knob and carriage bolt lock the clamp arm to the base.

Each clamp bracket is made from two interlocking pieces as shown in detail 'a.' They're screwed to the clamp arm. The opening in the bracket is sized to fit your clamp. A simple clamp stop keeps the bar clamp from shifting while in use. I screwed it to the clamp arm after the bar clamp is placed in the brackets.

*Gary Kruger*
*Cascade, Idaho*

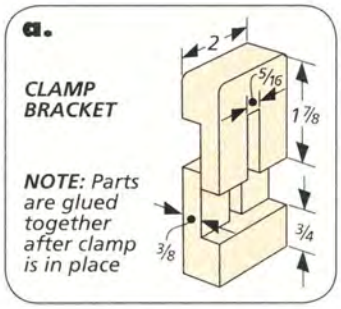


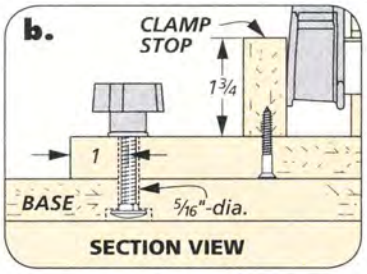


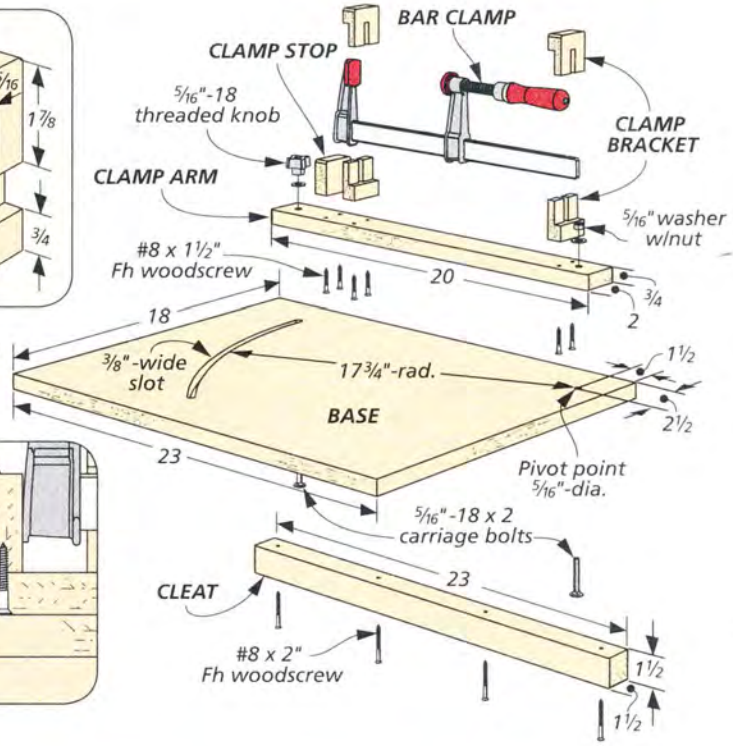


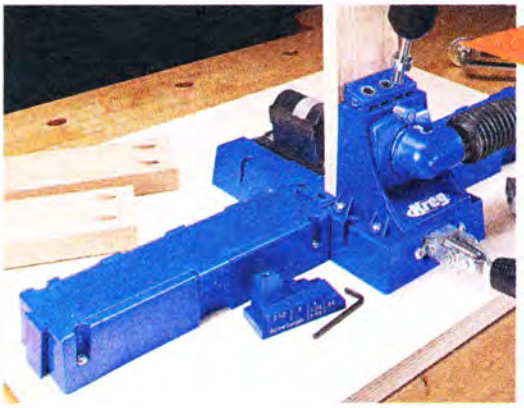

## Win This Kreg K5 Jig

Simply send us your favorite shop tips. If your tip or technique is selected as the featured reader's tip, you'll win a *Kreg K5 Jig* just like the one shown here. To submit your tip or technique, just go online to *Woodsmith.com* and click on the link, "SUBMIT A TIP." There you can submit your tip and upload your photos for consideration.

### The Winner!

Congratulations to William Aulick, the winner of this *Kreg K5 Jig*. To find out how you can win this jig, check out the information at left.

## Handy Lathe Tool Holder

Nothing is worse than having a wood-turning tool roll off your workbench and crash into the shop floor. If you're lucky, you may only scrape the handle. If not, it may be off to the sharpening station to remove a chip in the cutting edge of the tool.

I had experienced this one too many times while working at the lathe. To prevent it from happening again, I built this handy lathe tool rack to keep my turning tools close-by, and more importantly, safe from damage.

**SIMPLE CONSTRUCTION.** I designed my tool rack to slip over the bed of my wood lathe. But it can be customized to fit other size lathes, as well. The sides have notches that act as the actual tool holders. These are easy to form at the band saw.

I also cut dadoes in the sides to hold the bottom platform. This platform should be cut to the width of your lathe bed, plus the depth of the dadoes. I then added a cleat to the underside of the platform that slips between the ways.

*William Aulick*
*Cincinnati, Ohio*

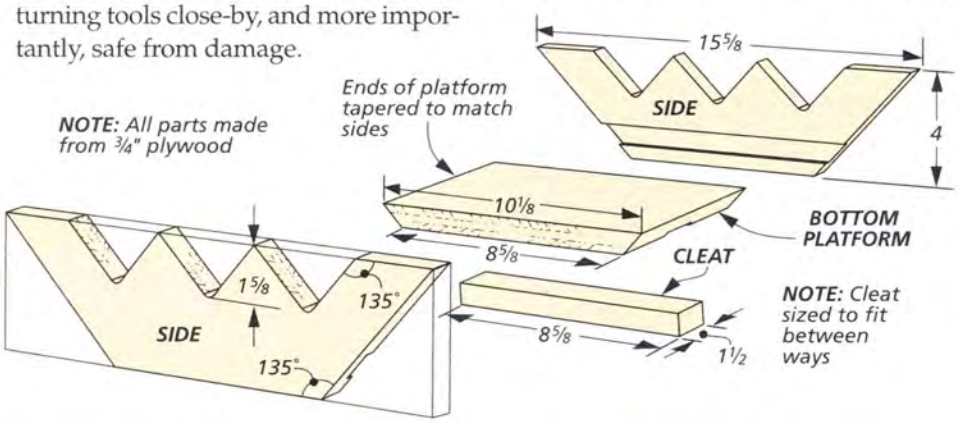


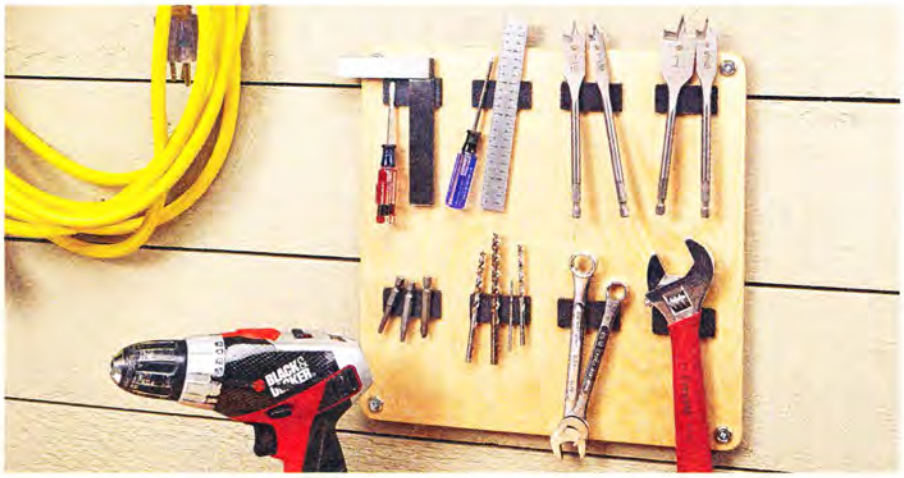

## Magnetic Tool Rack

When working in the shop, I like to have all of the tools for a particular task at the ready. Walking back and forth to my tool cabinet and pegboard is just wasted time and motion. To keep the tools for my projects handy and organized, I made this simple board with magnets attached to its face.

This magnetic tool rack allows me to gather all of the tools I will need for any given project and keep them close at hand on the wall by my workbench or assembly table.

**BUILD THE RACK.** I used a piece of plywood for the board. The magnets are readily available at most hardware stores and home centers in an assortment of sizes. I routed a shallow recess for each magnet and used epoxy to hold them in place.

*Carl Wubben*
*Dubuque, Iowa*


DIGITAL WOODSMITH

**SUBMIT TIPS ONLINE**

If you have an original shop tip, we would like to hear from you and consider publishing your tip in one or more of our publications. Jump online and go to:

**Woodsmith.com**
Click on the link,
**"SUBMIT A TIP"**

You'll be able to tell us all about your tip and upload your photos and drawings. You can also mail your tips to "Woodsmith Tips" at the editorial address shown on page 2. We will pay up to $200 if we publish your tip.

**RECEIVE FREE ETIPS by EMAIL**

Now you can have the best, time-saving secrets, solutions, and techniques sent directly to your email inbox. Just go to

**Woodsmith.com**
and click on
**"WOODSMITH TIPS"**

You'll receive one of our favorite tips each and every week.

## Low-Cost Folding Sawhorse

Recently, I needed to replace some old and badly damaged sawhorses in my shop. My goal was to construct a light-duty, folding sawhorse using only one 8′-long piece of 1x4 stock and a small piece of ¼" plywood. This design I came up with was so inexpensive to build, I decided to make several.

**SADDLE, LEGS, & BRACKETS.** The first order of business is to cut the top beam to size from the 1x4 stock. Go ahead and lay out and predrill the holes in the beam for attaching the legs and brackets later on. I then ripped the remainder of my 1x4 board down to use as legs and brackets.

As you can see in the plan below, the legs on the opposing sides of the sawhorse's top beam are actually different lengths with different profiles cut on the top end. As you cut them to size, be sure to label them to ensure they're mounted to the correct side. The brackets can now be cut to size and mounted to the beam along with the legs. A couple carriage bolts and lock nuts allow the legs to pivot closed.

**STRETCHERS & BRACES.** I screwed a plywood stretcher to each side to add rigidity to the sawhorse. The braces can now be added to the legs. One end of each brace is notched to fit over the shank of a hex bolt in one leg on each end. This keeps the sawhorses locked open. Another hex bolt further up the leg locks them closed.

*Dennis Johnson*
*Winnipeg, Manitoba*

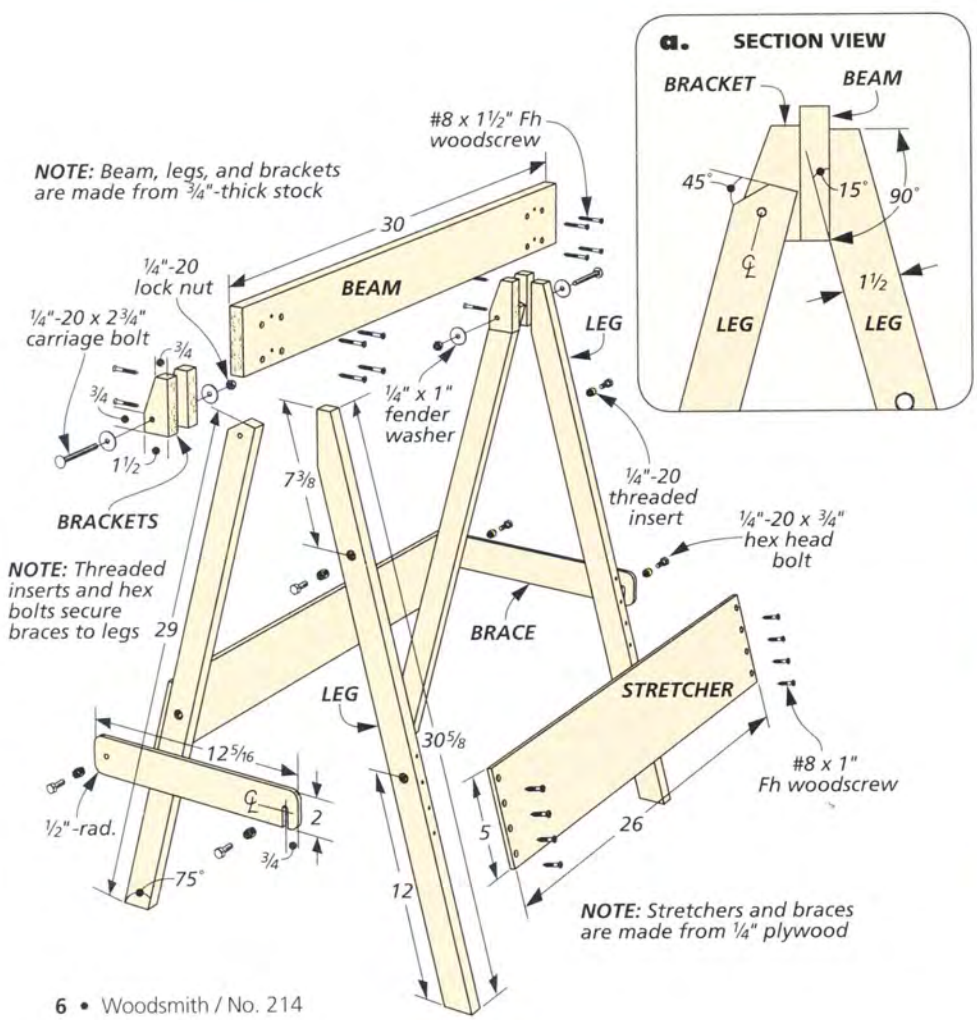

▲ The sawhorses fold flat for storage. The braces hook onto a bolt on the leg to keep them locked in the closed position.

## Subdividing Circles

On a recent trip through the local grocery store, I found this handy item at right, a tuna and veggie press and strainer.

The larger, outside disc has 36 evenly-spaced holes around its outside edge and a second set of holes offset halfway between the first set. This allows you to divide a circle into 5° segments easily. Or in my case, assist in laying out the number positions on the wood face of a clock I was building.

Simply mark opposite holes to find the exact center. You can then count over in 10° increments and mark the positions you need. In the case of my clock, every 30° was marked.

*Jonathan Bates*
*Little Rock, Arkansas*

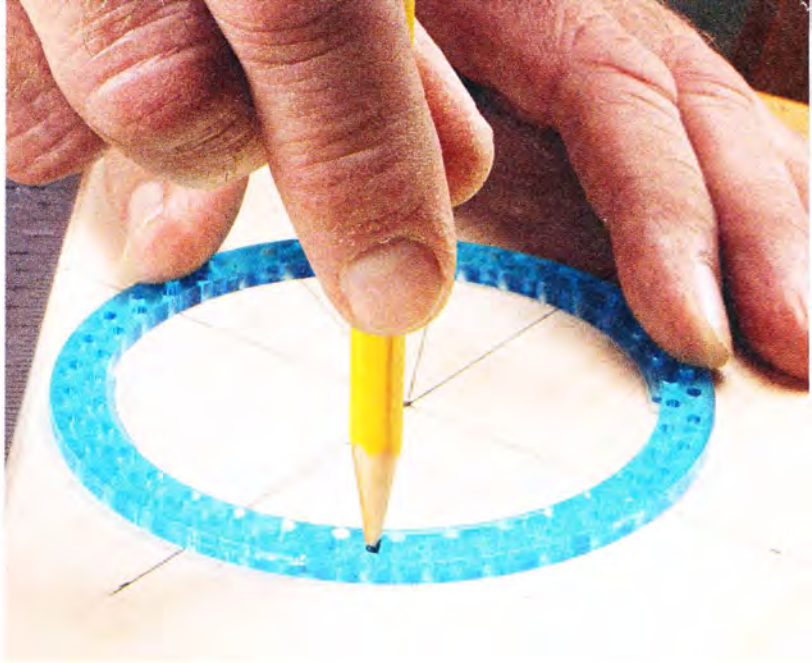

## Loose Parts Saving Tip

It's easy to lose small screws, nuts, or washers when assembling projects or repairing machinery in the workshop. And time spent searching through all the nooks and crannies of your shop (not to mention piles of sawdust) to find missing hardware is time spent away from what you really want to be doing.

So whenever I start on a project with lots of small parts, I use a rare-earth magnet to keep all of the hardware together. This could be as simple as placing the magnet on my workbench and letting the parts "gather" to the magnet. When performing some tasks, like changing the wheels on my bench grinder as shown at left, it's easy to use one of the wheel covers as a makeshift tray to accumulate all of the parts. A small, rare-earth magnet is powerful enough to hold an amazing number of items.

*Serge Duclos*
*Delson, Quebec*

# QUICK TIPS

**Flatten Bowed Plywood.** *Gary Azelton* of Chesaning, Michigan uses this clever method to flatten bowed pieces of plywood. Simply wet the concave side of the plywood and set the piece on some risers. A heavy weight on the convex side will straighten the piece out in no time.

**Strap Wrench for Lathe Chuck.** To help remove the chuck from his wood lathe, *Randy Wolfe* of Owensboro, Kentucky uses a strap wrench to assist in breaking it free. This versatile strap wrench can also be used to loosen smaller turning blanks from the spindle.

all about

# 7 essential tools for Metalworking

One way to add a distinctive touch to your woodworking projects is to create your own custom metal hardware. The corner braces on the bride's chest on page 32 are a good example. You won't find these pieces in a catalog or at the hardware store. Although there are commercially available options, they're made from thinner metal and don't have the same *gravitas* as the shop-made versions.

The good news is, working with metal to create simple hardware like this is pretty easy. Chances are you already have some of the equipment you'll need on hand. But you might need to pick up a few additional tools and supplies to get the job done. Don't worry, though, you won't have to spend a lot of money.

One word of caution, however: Before you begin, take a little time to review your safety practices. Safety glasses must be worn when working with metal. You'll also want to keep a pair of leather gloves on hand for any tasks that involve freshly cut metal pieces with razor-sharp edges. And of course, cutting and grinding metal can generate a spray of sparks, so you should sweep the sawdust off your shop floor and have a fire extinguisher within reach before you begin.

▲ Scratches on the surface of metal can make it tough to see your layout marks. Marking fluid makes them stand out.

## [1] Measuring & Marking Tools

Chances are you already own most of the measuring and marking gear you'll need. You can use the same rules, squares, compasses, protractors, and angle gauges on metal, just as you would for woodworking layouts.

But when it comes to marking metal workpieces, the process is a little different. I usually apply layout fluid to the metal blanks I use for making parts (photo at left). Sometimes it's difficult to see a mark on bare metal, since it's so easily obscured by other scratches. But by covering the piece in layout fluid, the mark stands out and ensures accurate measurements. A scratch awl is the best tool for marking on the layout fluid-covered metal.

## [2] Drill Press & Bits

Drilling metal with a hand drill gets old in a hurry. Plus, it's too easy for a drill bit to wander away from a layout mark using this method. A drill press makes the job far easier and more accurate (bottom left photo, opposite page). And a set of twist bits won't break the bank.

Remember to set the spindle speed to match the size of the bit you're using and the type of metal you're drilling (refer to your owner's manual for details). It's also a good idea to lubricate the drill bit with a drop of oil whenever you're drilling metal.

Finally, use a fence or clamp the workpiece to the drill press table to keep it stable. You don't want a metal workpiece to catch the bit and spin.

## [3] Cutting Tools

Most of us have a hack saw hanging on a wall or in a drawer in the shop. If not, that's the next thing to pick up. You'll need the saw to cut pieces to size. For cutting curved shapes, a good set of metal-cutting blades for your jig saw can speed up the task (photo at right).

I also keep a few abrasive cutting wheels for my circular saw. They can cut through just about anything. You can see how I used them on the braces for the bride's chest on page 39. When using the abrasives, however, remember to cut using a series of light passes.

▲ The task of cutting metal can seem intimidating. But a hack saw and metal-cutting jig saw blades make it easy.

▲ Tapping threads for a jig or project part adds a professional touch. A tap and die set makes this possible.

## [4] Machinist's Vise

One thing to pick up, if you don't already have one, is a machinist's vise. You'll find that your woodworking vise, no matter the style, is simply not the right tool for holding metal. A good machinist's vise not only holds the workpiece, but also has an anvil-type surface that's invaluable for peening or shaping metal parts.

When you get the vise home, it's a good idea to make a couple of modifications. First, you'll want to mount it on a piece of plywood so you can clamp it to your bench when you use it. When it's not in use, it fits under the bench. Second, as you can see in the main photo on the opposite page, I made a set of auxiliary wood jaws. The wood grips a workpiece tightly but won't mar the surface.

▲ A bench grinder is great for sharpening your tools, but can be used to clean up the edges of a workpiece, as well.

## [5] Grinder & Files

A bench grinder is certainly a welcome tool to have on hand when working metal. I use a white aluminum-oxide wheel (photo at left) on one side and a stiff wire wheel on the other side. Both come in handy. Keep a small trough of water nearby, as well, for cooling parts.

**FILES.** When it comes to more delicate shaping, I turn to a good set of files. Make sure you have a variety of shapes on hand. Flat, round, square, triangular, half-round, and knife-edge are all useful pieces in a metalworking tool kit. You'll also want handles for the files. On top of that, make sure to pick up a file card to keep them clean. The thin, stiff wires on the card are perfect for cleaning out the very fine particles left in the teeth after a hard day's work.

## [6] Tap & Die Set

The more proficient you become working metal, the more possibilities open up. For instance, I often make a metal jig or part that has a threaded hole for a threaded rod or bolt. This task requires a tap and die set. The set consists of hardened steel or carbide cutters to cut threads for most common sized screws and bolts. The photo above shows the setup for tapping threads.

▲ Twist bits are designed for drilling in metal. With a little oil for lubrication they cut quickly, cleanly, and accurately.

▲ Using a torch to heat steel brings it to red hot in no time flat. From there, you can bend, twist, or even harden it.

## [7] Propane or MAPP Gas Torch

There may come a time when you need to bend or twist steel either into a decorative shape or to conform to a project design. In those cases, a propane or MAPP gas torch is the answer. MAPP gas, another form of propane, burns a little hotter but either generates enough heat to allow you to shape the steel.

You'll find plenty of other uses for a torch. It's the best way to solder in many circumstances. And I like to use a torch for adding a darkened color to some metal surfaces.

Whether shaping or twisting the steel, as in the photo at left, or heating it to harden a blade or cutting edge, an inexpensive torch will get the job done.

A touch of brass, aluminum, or steel can add an interesting element to just about any project. If you give metalworking a try, you'll be hooked. W

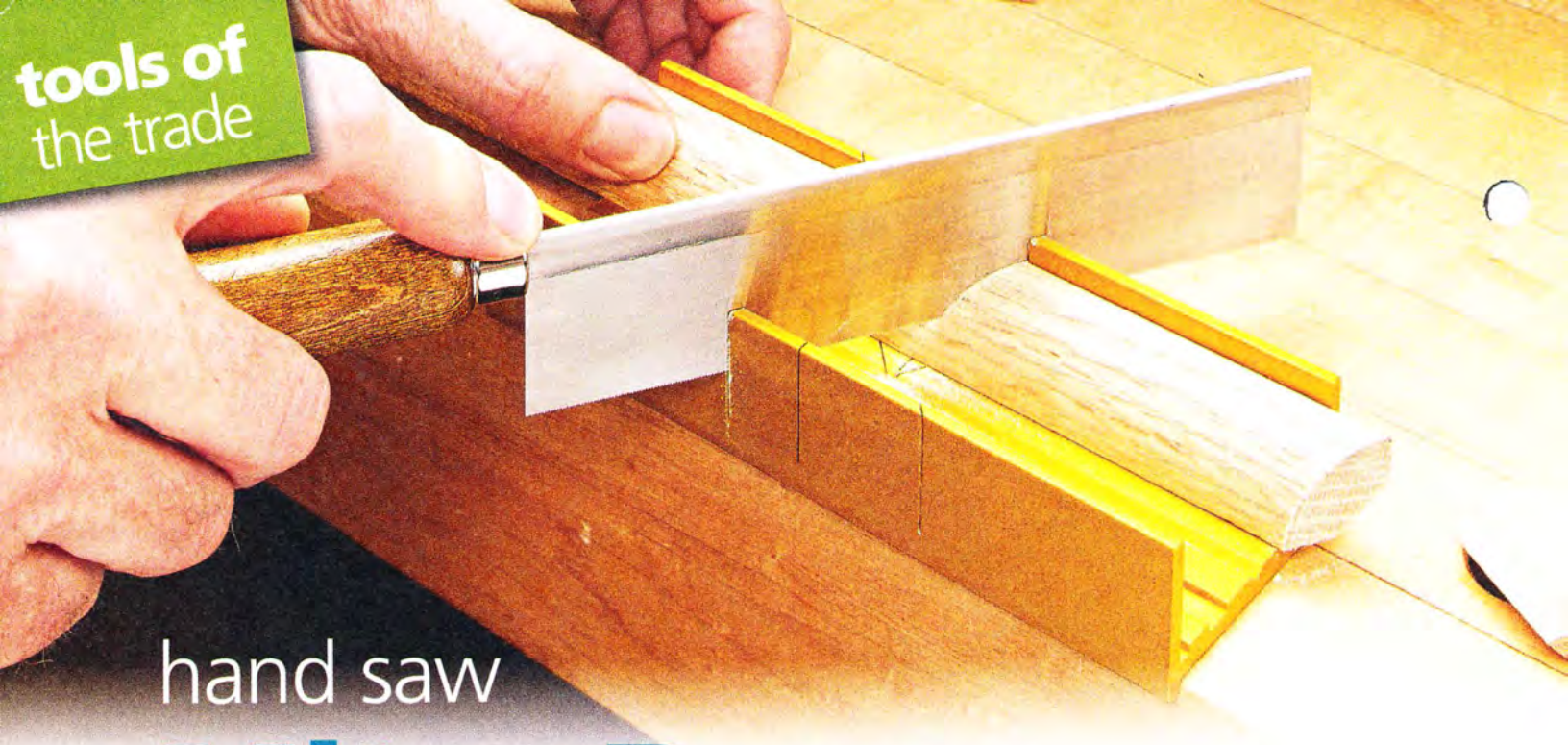

# hand saw Miter Boxes

At one end of the miter box spectrum are these basic units. They feature a separate saw and have kerfs to guide the blade.

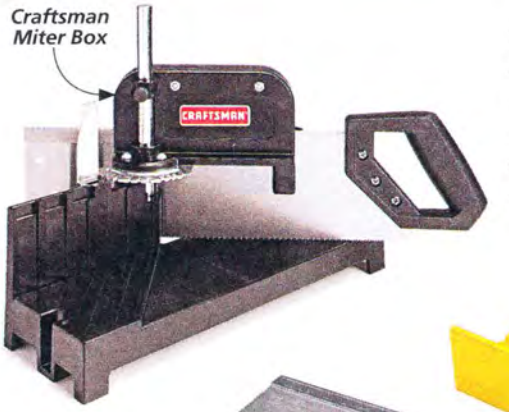


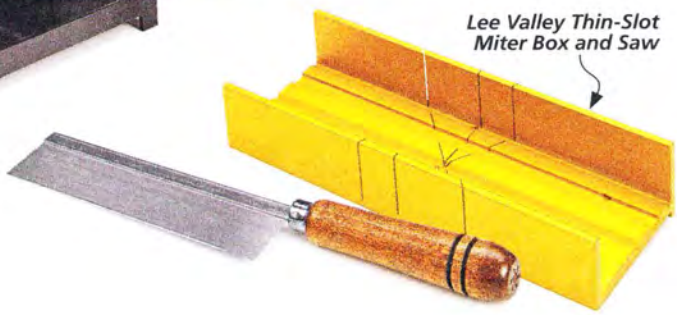


I'll freely admit that I'm a "power tool guy." If a job can be done more quickly and efficiently with a loud tool with loads of horsepower, then that's often the direction I'll turn.

But there are times when it's nice to take a step back and turn to hand tools. Making precision cuts on decorative moldings are a good example of this. If you try to cut these delicate pieces with a power saw, you run the risk of splintering them. Plus, the small cutoff can be a safety hazard if it goes flying across the shop.

**PRECISION MITER CUTS.** Of course, in order to make cuts precisely with a hand saw, you need a guide for keeping the blade both steady and aligned as it cuts. And miter boxes provide the solution here. As you've probably noticed, there are a number of hand saw miter boxes available. They run the gamut from inexpensive plastic options to high-end, high-capacity tools. The right one for you probably comes down to the type of work you do, and how often you think you'll use it.

**BASIC BOXES.** At its essence, a hand saw miter box consists of a flat base to hold the workpiece and a couple of fences with kerfs to guide the saw at the proper angle. With the basic miter boxes shown on the left, that is essentially what you're getting.

The *Stanley* and *Lee Valley* boxes both have kerfs in the box that allow you to cut at different angles. The *Stanley* miter box has kerfs at 22.5°, 45°, and 90°, while the *Lee Valley* box has kerfs at 30°, 45°, and 90°.

The *Craftsman* miter box works a little differently. It has a saw guide that pivots and locks into detents to cut at angles ranging from 8° to 90°. The *Stanley* and *Craftsman* miter boxes shown both come with a saw, while the saw that fits the *Lee Valley* box is sold separately.

**SIMPLE SOLUTIONS.** With prices in the $20 range, it's easy to dismiss these tools as cheap. But here's the reality: If you only see yourself using a miter box occasionally on small molding pieces,

they cut accurately and work just fine. In particular, I was impressed with the *Lee Valley* thin-slot miter box. It works with a fine-toothed saw that is specifically made for trimming small molding pieces to size.

**HIGH-END MITER BOXES.** If your woodworking often includes crown molding, picture frame parts, or other wide workpieces, then you might want a bit more capacity from a miter box. That's when it's worth investing a little more in a higher-end model like the one shown on the right.

These miter boxes are made by companies like *Nobex*, *Stanley*, and a few others, and they share a number of similar features. For starters, the saw is actually an integral part of the miter box. It slides back and forth between posts mounted to the miter box, ensuring a smooth, precision cut every time. For the *Nobex* saw, you even have the ability to switch out the blade for one with finer teeth or to install a metal-cutting blade.

The boxes also feature a lot more bells and whistles than the miter boxes shown on the opposite page. For one, you're not locked into just a few cutting angles. They all feature a rotating base for setting the miter cut at almost any angle that you need.

These miter boxes also have a greater capacity, which makes it possible to cut crown molding at its mounted angle (photos above). Hold-downs keep the workpiece secure while you cut, and a stop block allows you to make repetitive cuts for uniform workpieces.

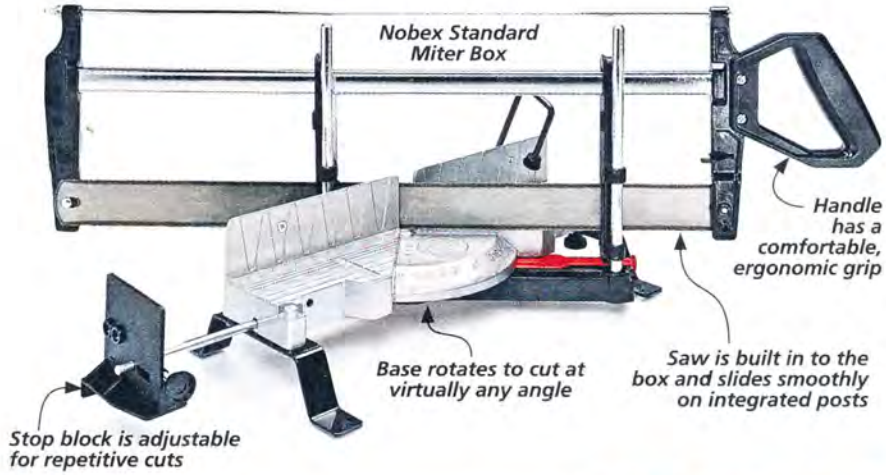

▲ High-end miter boxes have a lot more features, such as multiple angle settings, stop blocks, hold-downs, and smoother-cutting, stable blades that are integral to the unit and slide between posts mounted to the miter box.

Of course, all this increased performance comes at a premium. Prices range from $50 for a basic *Stanley* miter box to $170 for a professional version of the *Nobex* miter box that features an increased cutting capacity and higher-quality components. (The standard *Nobex* miter box shown above will set you back about $109.)

**THE MITER BOX FOR YOU.** If you see a miter box taking the place of the table saw for tasks like cutting crown molding or picture frames, it might be worth spending a little more on a high-end model. But if an occasional trim cut is all you need, a basic miter box is just fine. See the box below for tips on making a single-use miter box. W

## SIMPLE, SINGLE-USE MITER BOX

When I need a miter box for a single purpose, such as mitering glass stop, sometimes I'll simply cut a groove in a block of wood to match the dimensions of the workpiece. Then I'll mount the block to a cleat so I can clamp it in my bench vise. After kerfing the block as shown in the photo at right, I'm ready to miter small pieces easily.

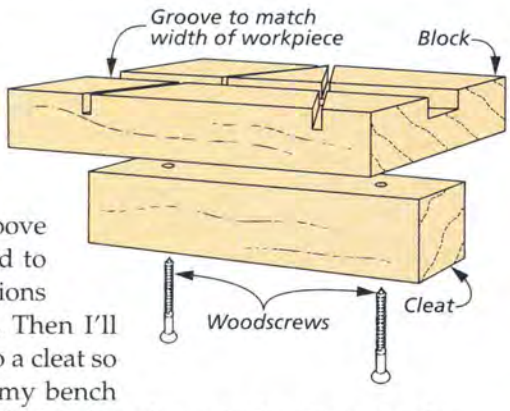

▲ To create accurate kerfs when making your own miter box, use a combination square as a guide. Be sure to cut the kerfs with the saw you plan to use with the box.

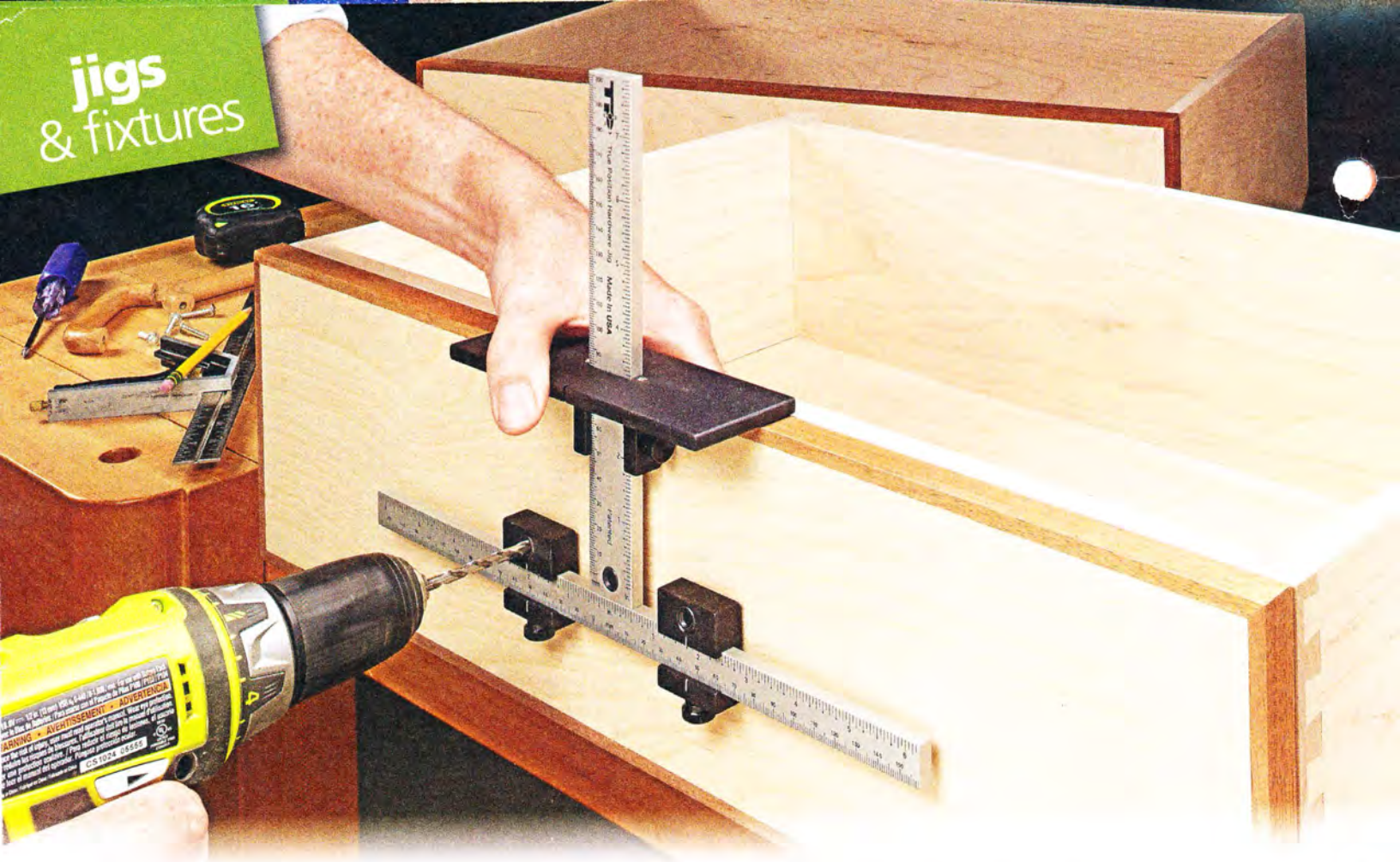

# increase accuracy with hardware
# Installation Guides

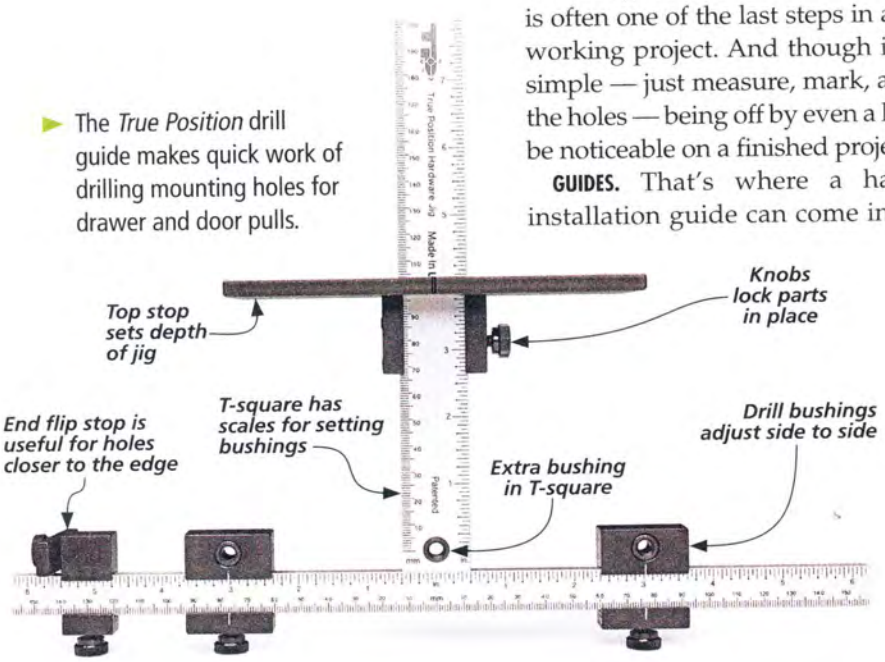


► The *True Position* drill guide makes quick work of drilling mounting holes for drawer and door pulls.

Installing door and drawer hardware is often one of the last steps in a woodworking project. And though it seems simple — just measure, mark, and drill the holes — being off by even a little can be noticeable on a finished project.

**GUIDES.** That's where a hardware installation guide can come into play. In a nutshell, these guides take the guesswork out of installing pulls. If you have a lot of hardware to install on uniform doors or drawers, you set the guide once and use that setting to drill all the holes. A good guide both saves you time and improves results. I found a few recent offerings that seem to do the trick in this arena.

**TRUE POSITION GUIDE.** If making cabinets with a lot of doors and drawers is a common practice in your shop, then the *True Position* drill guide shown above and at left is certainly worth a closer look. It's intended to handle all door and drawer pull installations, and in my test it proved up to that task.

As you can see, the drill guide is fairly simple to understand. The main component is a beefy aluminum T-square with scales on both arms. The longer,

narrower arm of the square has a couple of bushings on it that slide from side to side and lock in place. These are used to create the spacing between the holes for the pulls. There's also an end stop that flips down to create a second positive stop at the side of the guide when needed (more on that in a minute).

The wider, shorter arm has a large top stop that adjusts up and down to position the sliding drill bushings. It also has an additional bushing itself that can be used for installing knobs or pulls with a single screw.

**DRAWER PULLS.** You'll use the jig differently depending on whether you're installing drawer or door pulls. For most drawers, you set the top stop to establish the position of the pull on the height of the drawer. Then, you position the two bushings an equal distance from the center (main photo on the opposite page).

Now all you have to do is mark a centerpoint on the drawer front. Set the jig in place so the mark is visible in the center bushing, and you're ready to drill.

▲ Hardened steel bushings on the drill guide provide accurate, repeatable results when drilling.

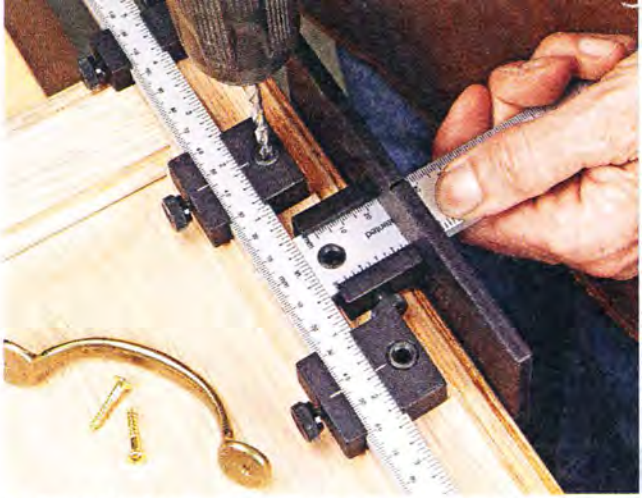

▲ To drill for door pulls, set the top and end stops to position the pulls. Then set the bushings to match the hardware for consistent holes on every door.

**DOOR PULLS.** You set two stops for door pulls, one on the side and one on the bottom, as shown above. Then simply set the bushings to match the hole spacing in the hardware and drill. The jig is even reversible, so you can just flip it over and use the other sides of the bushings to drill mirror-image holes for the doors in a two-door cabinet. The photos above provide the details for setting up the guide for door pulls.

**HIGH-END JIG.** My impressions of the *True Position* drill guide were very positive. It is without a doubt a quality tool made of good components. The T-square is rock-solid and resistant to warping, and the drill guides are hardened steel. Everything adjusts easily, locks securely, and works as advertised. At $150, it's worth the investment if you build a lot of cabinets. For some less expensive options, take a look at the box below. W

## A SIMPLER ALTERNATIVE: EZ-JIGS

If you're looking for an inexpensive solution for installing door and drawer hardware, then these *EZ-Jigs* can handle the task. You'll need separate jigs to do both doors (*EZ-1000*) and drawers (*EZ-2000*). But even so, the jigs only cost about $35 each (refer to the Sources on page 51 for more information).

The jigs are made from plastic and adjust vertically and horizontally to position the holes where needed. You then lock in the settings for easy repeatability. Both jigs accommodate pulls with a spacing of 3", 3½", and 4", which are some of the most common hole spacings for door and drawer pulls.

The *EZ-Jigs* don't have the same versatility as the *True Position* drill guide, but they're more economical options. Their unique design also makes them easy to hold the jig with one hand while drilling with the other hand, as you can see in the photos on the right.

▲ The *EZ-2000* jig adjusts both vertically and horizontally to allow you to drill centered holes for drawer pulls.

► Since you can position the *EZ-1000* with one hand, it's useful for drilling holes in doors when they're already mounted.

router table

# Crown Molding

Horizontal crown molding bits allow you to cut a large cove in the face of a workpiece smoothly and easily in multiple passes.

Decorative crown molding is a common element in woodworking, whether it's installed around a ceiling in a room or at the top of a cabinet. However, due to the wide cove in the face of crown molding, many shy away from crafting it in their shops. They may think that buying crown molding is their only option.

**SHOP-MADE COVES.** Fortunately, cutting your own wide coves for crown molding is definitely a possibility. And there are actually a few different ways to go about it. One traditional technique is to pass the boards at an angle over the table saw blade and cut the cove in a series of progressively deeper passes. You can see a brief overview of this setup on page 17.

**COVES AT THE ROUTER TABLE.** But there's another way to cut a wide cove in the face of a workpiece. And that's to use a horizontal crown molding bit at the router table. These bits, shown in the margin photo on the left, cut cleanly and smoothly, which greatly reduces the amount of sanding needed on the finished cove. They're available from several router bit manufacturers and can cut a cove that ranges in diameter from 1½" to almost 3". They're also less expensive than you might think (refer to Sources on page 51).

**SETTING UP FOR COVES.** Cutting coves with these router bits isn't difficult, but it does require proper setup to get it just right. Unlike many bits used at the router table, this one isn't guided by a bearing. Rather, the fence guides the workpiece as you pass it over the bit.

This gives you a couple options with your workpiece. You can either center the bit on the finished width of the piece, or you can cut a cove in a wider board with the intention of trimming it to final width later on. Either way, take some time to set the fence accurately before you start. It's also worth making a test piece the same width as the workpiece to check the settings and make sure you get the result you're looking for.

**OTHER CONSIDERATIONS.** As far as router bits go, these horizontal crown molding bits are big, with a large-diameter cutting head. That means you'll want to run them at a lower speed than most bits (about 12,000 RPM). So it's important to have a variable-speed router installed in your table for this operation. You'll also need an opening in your router table plate that's large enough to accommodate the bit.

When it comes time to actually cut the cove, I outfit my fence and table with featherboards to keep pressure on the side and top of the workpiece. Workpieces have a tendency to lift during a cut like this, and the featherboards help prevent it. In addition, use rubber push blocks to guide the piece over the spinning bit as a final precaution to keep the piece from lifting, and also to protect your fingers.

It's best to cut the cove in a series of progressively deeper passes. Start with the top of the bit about 1/8" above the table surface. Then make a pass, and adjust the bit height upward another 1/8". Repeat until you reach the final profile of the cove (Figure 1 above).

**FROM COVES TO CROWN MOLDING.** At this point, you have a flat, square workpiece with a cove in one face. There are a few more steps involved to turn this board into a piece of crown molding, and those will take you back to the table saw.

With some crown molding, all four corners of the piece are trimmed at 45° angles. That makes the table saw setup pretty easy, as you can see in the Figures 2 and 3 on the right. You just tilt the blade to 45°, and set the rip fence so that the waste falls to the outside. Make one cut, and then rotate the piece 180° to rip the other edge.

For the other face of the board, you'll need to reset the rip fence, as shown in Figure 3. But the procedure for trimming the final two corners to their final angle is essentially the same.

The corners are not exactly at 45° on some crown moldings, so you'll have to change the angle of the blade from what is shown in the drawings here. For angles greater than 45°, you'll need to pass the molding through the blade on edge in order to cut the proper angle, since most table saw blades can't tilt any farther than that. But even this is fairly simple to do safely.

**USEFUL ROUTER BITS.** Before discovering these bits, I cut most of my coves at the table saw. These bits leave a lot smoother cove than a table saw blade, which tends to leave ridges in the cove. That means there's considerably less sanding to do after the cut is complete, and that's a big positive in my book.

The bits are available in a few different sizes, and they're all common cove diameters that you'll typically find on many commercial crown moldings. That means they'll work on a variety of different projects. So if there's one type of cove that you cut frequently — and there's a router bit available to do it — I would highly recommend considering these bits just for the ease and smoothness with which they can make the cuts. For a different approach to cutting moldings at the router table, take a look at the box below.

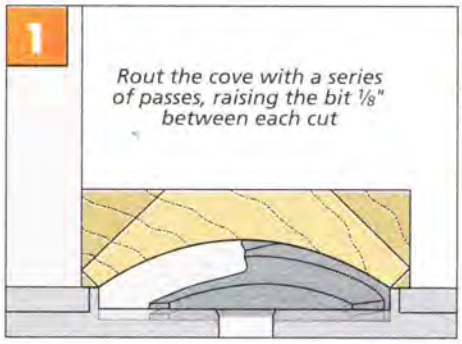


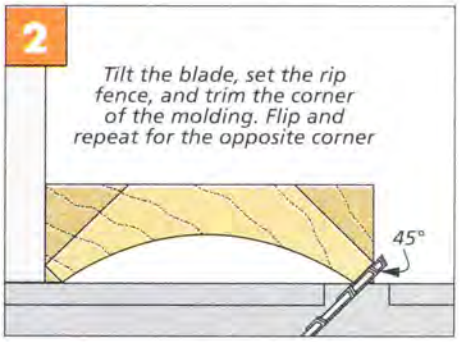


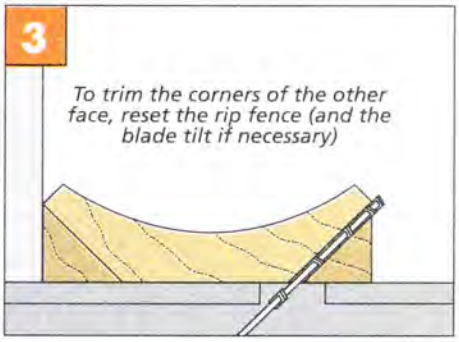


## BASIC COVE MOLDING

I often refer to "cove molding" as a narrow strip of molding with a cove cut on the edge. This differs from crown molding, where the cove is on the face of the workpiece. Cove molding is cut a bit differently at the router table.

**MAKING COVE MOLDING.** To make cove molding, I'll use a cove bit (photo at right). Position the bit in an opening in the router table fence to establish the size of the cove, as shown in Figure 1, and then make the cut.

The final width of cove molding is usually narrow, so I like to form the cove on both edges of a wide blank to keep my fingers safe. Then I complete the molding by ripping the two pieces free from the blank, as you can see in Figure 2.

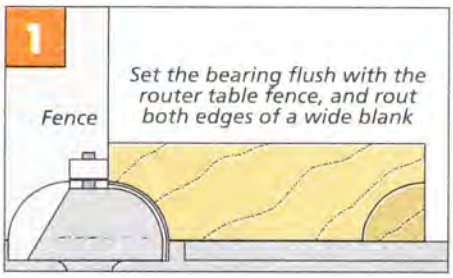


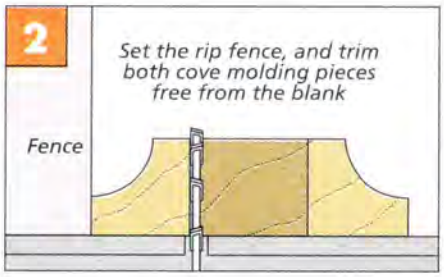

Cove router bits are bearing-guided and cut a cove in the edge of the workpiece.

Weekend Project

# Cheese & Cracker Serving Tray

This wood tray and cutting board are sure to be a hit at your next party. Packed with fine details, they're as fun to build as they are to use.

I enjoy building cabinets as much as the next guy, but every once in a while it's nice to scale things back and build a simple project. And with just three different project parts, this tray won't be too taxing to your materials' budget.

At the same time, though, this tray also doesn't skimp on the interesting woodworking techniques. You'll find a little bit of everything here — from coves cut on the table saw to band-sawn curves to a glued-up cutting board. It's a fun little project that's sure to keep your weekend busy.

**EYE-CATCHING TRAY.** As you can see, the end result is a solid-wood tray that you'll be proud to bring out for your guests at your next get-together. Its pleasing combination of solid cherry and maple, along with its graceful curves and coves, will definitely turn heads. Of course, it's also just as perfect for movie night for two as it is for a whole party.

The tray looks stylish, but all these details have a purpose, too. The coves on the top of the tray are perfectly sized for your favorite crackers. The pleasing curves on the ends are under-cut to create a pair of handles. And then there's the end-grain cutting board, which is well-suited for slicing cheese, olives, meats, or whatever else the occasion demands. The cutting board is also easily removable from the tray (margin photo at left). This allows for fast cleanup, and the board makes a great stand-alone piece all on its own.

**INTERESTING BUILD.** Some of the techniques, like the table saw coves, may seem a bit challenging at first. But there are plenty of step-by-step illustrations over the following pages to make building your own tray a snap.

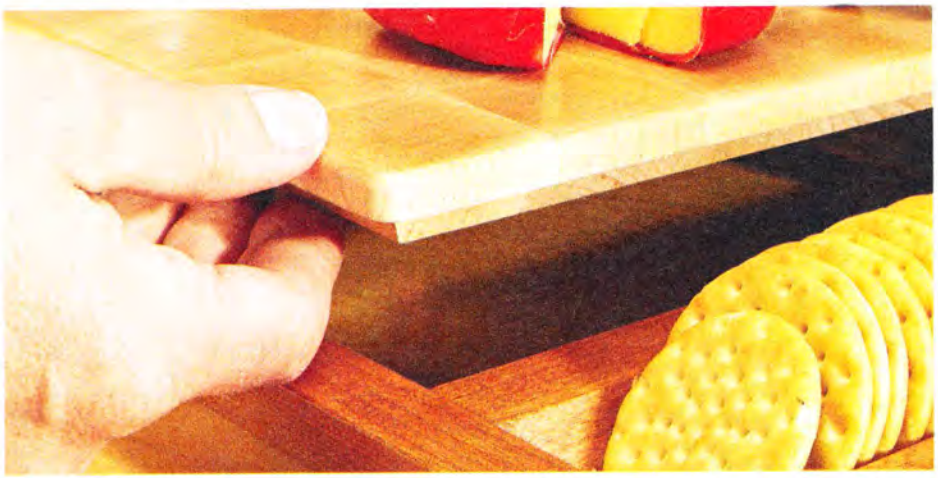

▲ Beveled edges allow the end-grain cutting board to rest within the opening in the serving tray. Simply lift it out for easy cleanup or to use as a separate food station.

# start with the **TRAY ENDS**

The basic tray consists of four parts: Two tray ends that receive coves on both faces, as shown at right, and a tray front and back that surround the ends. You'll build the tray first before getting started on the cutting board that fits in the middle.

**PREP THE ENDS.** The tray ends are made from a single blank of 1"-thick cherry. So you'll want to plane a piece of stock for the ends. Now cut the blank to width but leave it extra-long, as shown in the drawing above right.

**CUTTING COVES.** The reason you're starting with a longer blank is simple. The next steps involve setting up and cutting the coves on the tray ends at the table saw, and it's faster and easier to cut the coves in a longer blank than in a pair of shorter workpieces.

Making coves at the table saw involves passing the board at an angle over the table saw blade. This sounds a bit unorthodox, but I assure you that it's quite safe and pretty easy, as well. The important thing is to go through the proper setup steps and raise the blade in very small increments between passes.

**SET THE ANGLE.** To make this cut safely, you'll need to set a couple of fences at the proper angle to guide the workpiece. That process is illustrated in Figure 1 at right. As you can see, you'll need a simple gauge that's set to the width of the cove in order to complete this step. Then you'll mark a line to match the angle of the cut.

Once the angle is established, a pair of fences guide the blank, as shown in Figure 2. You want the piece to slide smoothly without binding or moving from side to side.

**MAKE THE CUT.** The secret to cutting this cove is to make multiple passes. Raise the blade about 1/8" above the table, and pass the blank over it, using push blocks to guide the workpiece. You'll then flip the board as shown to cut the second cove. After raising the blade a bit, repeat the process until you have completed the coves. A little sanding to smooth the coves completes the job.

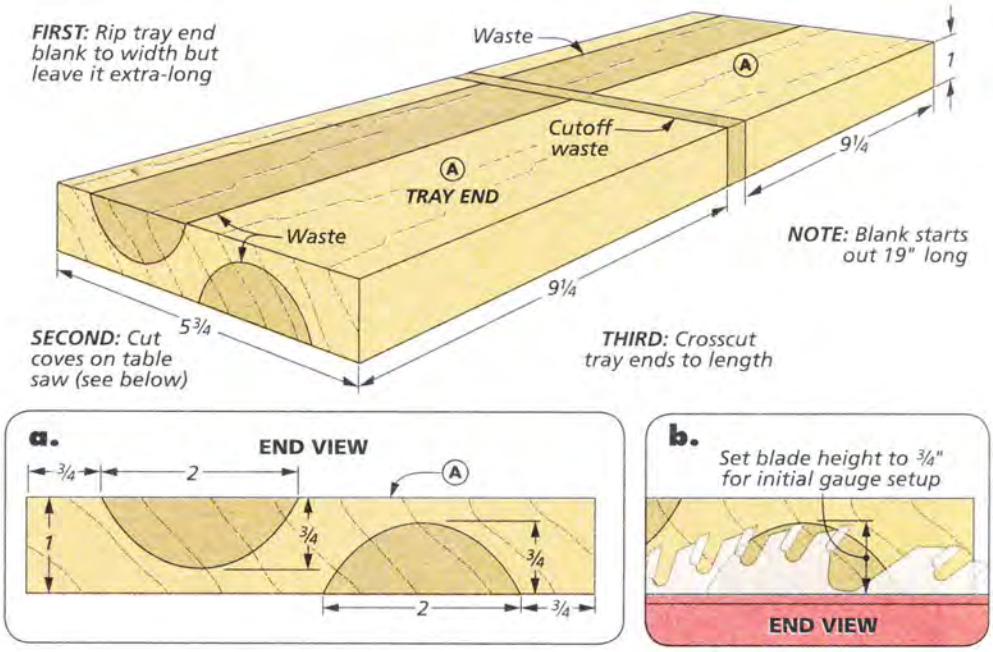


## How-To: CUT THE COVES

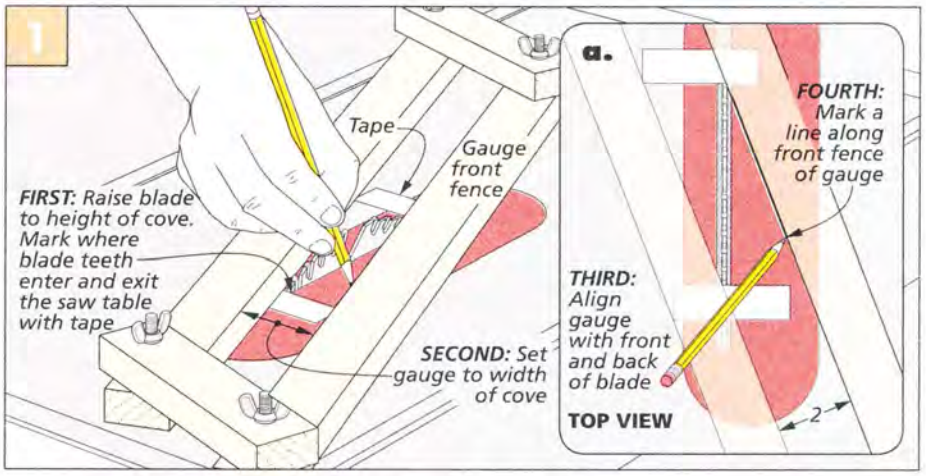


**Set the Angle.** Raise the blade to the height of the cove, and mark the ends of the blade with masking tape. Then set the gauge to the width of the cove, and align the gauge with the tape. Mark a pencil line along the front fence.

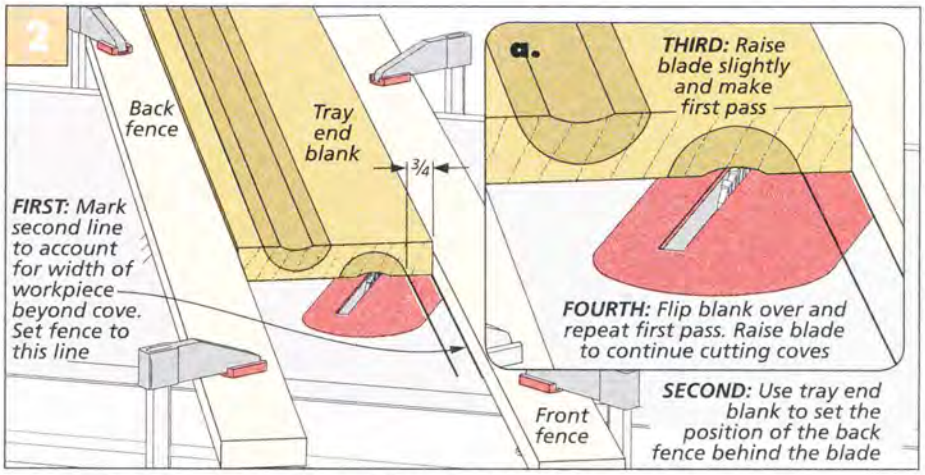


**Cut Coves.** Mark a second pencil line parallel with the first to account for the width of the workpiece beyond the cove. Set a pair of fences, and cut the coves in a series of passes, removing between 1/16" and 1/8" of material each time.

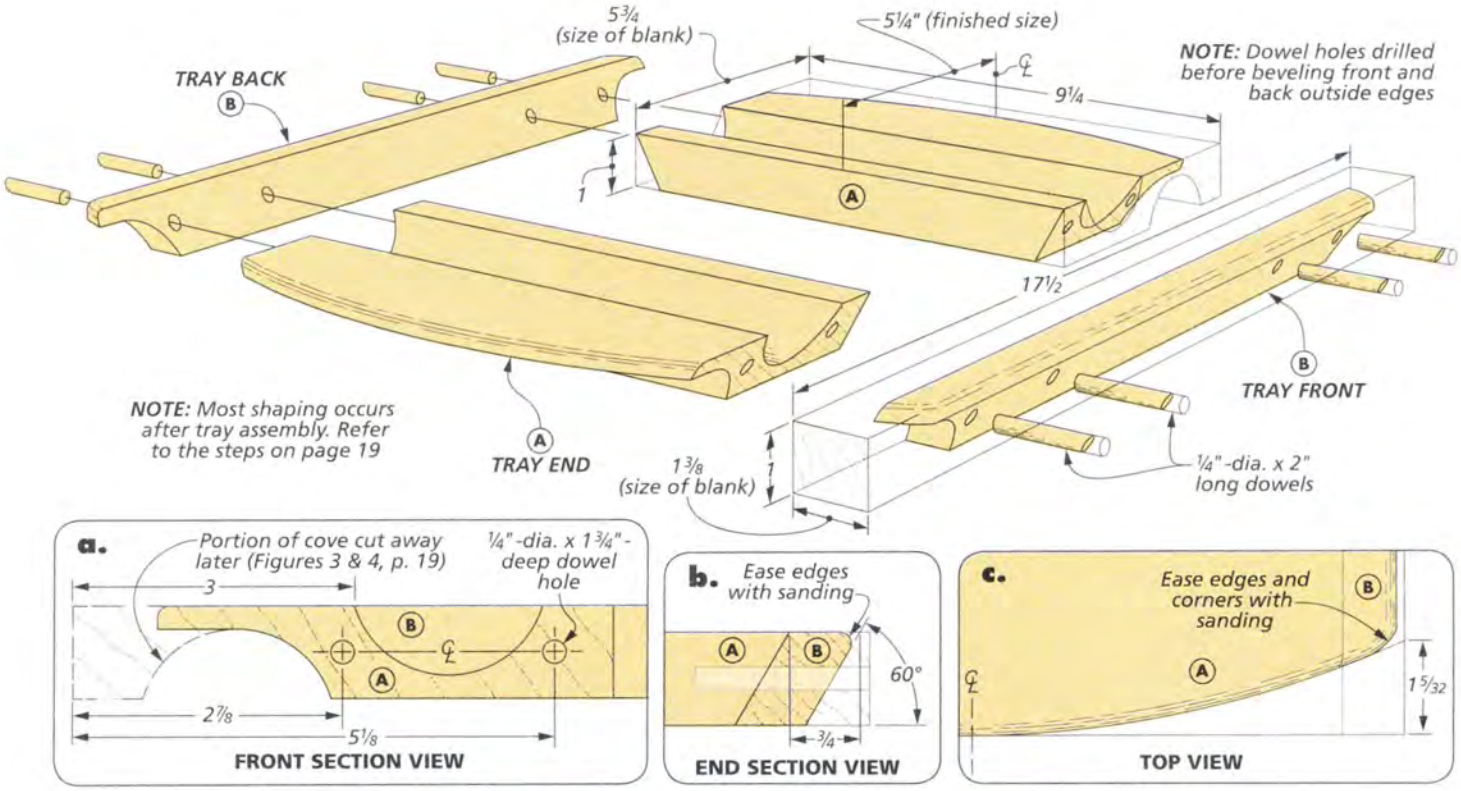


# Building the **TRAY FRAME**

The next steps involve adding a front and back to the coved tray ends and then going through the steps required to shape the completed tray. That process starts with cutting the longer blank in two to form the tray ends, as shown above. As the outline in the drawing indicates, I would leave them a little long for now. That's because you'll come back later and bevel the tray ends to their final dimensions.

**TRAY FRONT & BACK.** But first, you'll want to make the tray front and back. These start as square blanks, as shown above. You'll trim them to final shape through the process of building the tray.

Once the tray is assembled, dowels at each end help to hold it together. It's important that the holes for the dowels don't intersect the coves in the tray ends. The dimensions in detail 'a' above help with this, but I also traced the coves, as shown in Figure 1, just to be on the safe side. Then you can drill the holes in the front and back (Figure 2).

**BEVEL CUTS.** The tray ends, front, and back all have mating bevels cut on them

## How-To: DRILL PILOT HOLES & CUT BEVELS

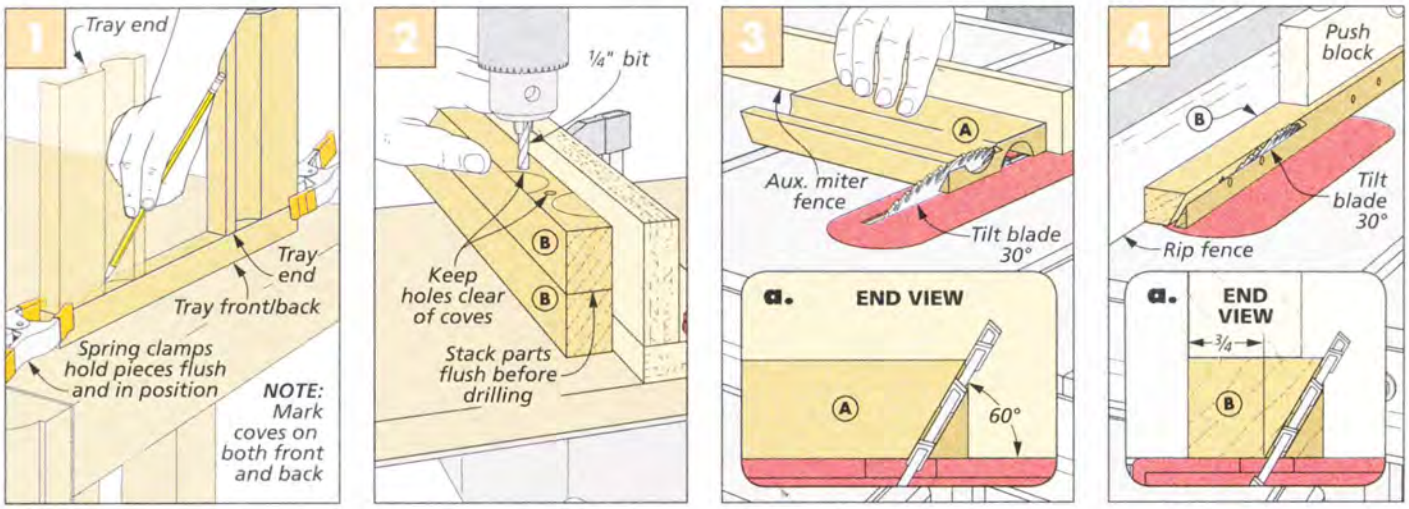


**Trace.** To help locate dowel holes, trace the cove profiles onto the front and back.

**Drill Holes.** Stack the front and back, and drill pilot holes for the dowels.

**Bevel Ends**. Using a miter gauge, bevel the ends of the tray ends at the table saw.

**Bevel Edges**. Repeat the cut on the edges of the tray front and back.

where they are glued together. You can use the same blade tilt setting to cut all the pieces, as shown in Figures 3 and 4 on the opposite page.

**GLUEUP.** You're now ready to glue the tray ends to the tray front and back. The only challenge with this glueup is the mating bevels will want to shift as you apply clamping pressure. You can prevent this with blocks clamped across the joint lines, as shown in Figure 1 at right.

**DOWELS.** To reinforce the joints, add dowels to the corners of the tray. You already drilled holes in the front and back, so use those as guides for drilling the holes in the tray ends (Figure 2). Then glue in the dowels and sand them flush with the surface.

**HANDLES.** The next steps involve shaping the ends of the tray to form the handles for carrying it. As you can see in the main drawing and detail 'a' on the opposite page, you cut away about half of the outer cove on each tray end in order to form these handles. Figures 3 and 4 at right show the two table saw cuts required to do this.

After making these cuts, there will still be small "ears" of material left over on the tray front and back (Figure 5). You'll want to remove these in order to make the half-coves consistent across the entire end of the tray.

I took care of this with a series of passes over the saw blade as shown in Figure 5. Carefully lower the blade and reset the rip fence for each pass to cut away this extra wood. Then sand it all smooth as shown in Figure 6.

**BEVEL EDGES.** At this point, you're finally ready to bevel the outer edges of the tray. After tilting the blade, position the rip fence so the waste falls to the outside, as indicated in Figure 7.

**CURVED ENDS.** Each end of the tray has a gentle arc to it. I laid this out as shown in detail 'c' on the opposite page and then cut it at the band saw, staying slightly outside of the layout lines (Figure 8).

**SANDING.** Before you can call the tray portion of this project complete, it's time to get out the sandpaper and spend a bit of time getting the entire tray smooth. Be sure to note the slight radius on the corners, as well as the roundover along all of the ends and edges of the tray. I accomplished all of this with a little hand sanding.

## How-To: COMPLETE THE TRAY FRAME

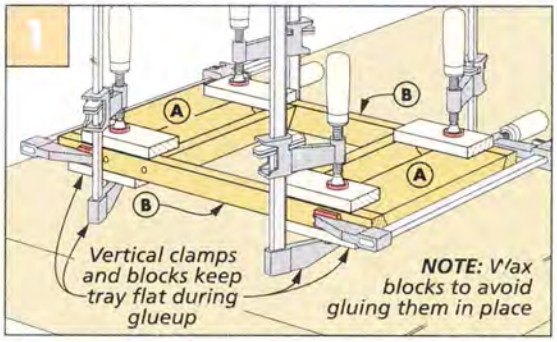


**Tray Glueup.** Join the tray front and back to the tray ends with glue and clamps. Use blocks at the joints to prevent shifting during glueup.

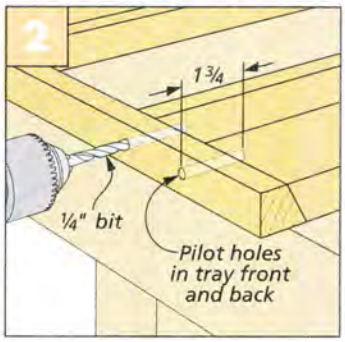


**Drill Holes.** Use holes in the tray front and back as guides for drilling the tray ends.

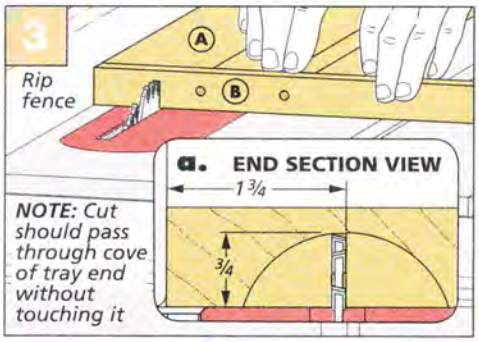


**Kerf Tray.** Forming the tray handle starts with making a cut at each end of the tray, as shown above.

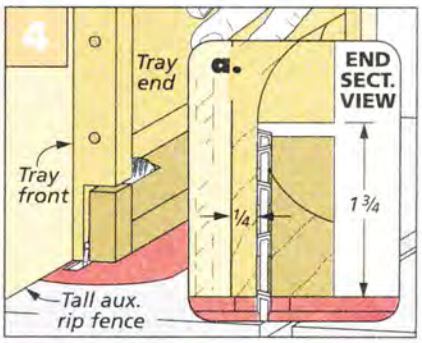


**Form Handle.** To remove material for the handle, stand the tray on end and pass it through the blade.

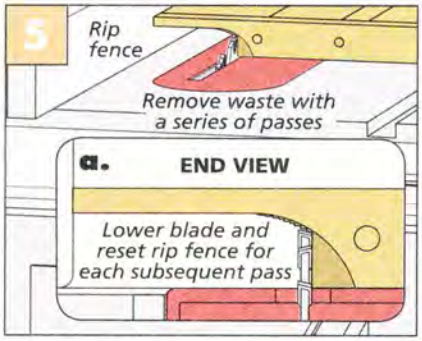


**Notch Front & Back.** A series of table saw passes is required to complete the cove on the tray.

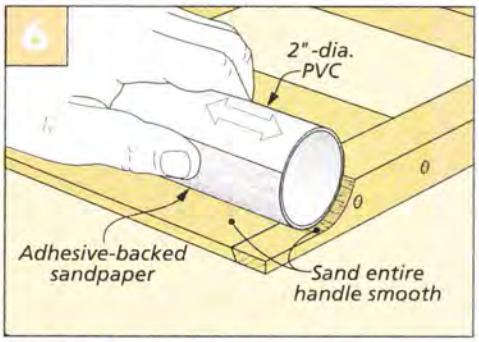


**Sand It Smooth.** A piece of 2"-dia. PVC makes the perfect sanding block for smoothing the cove on the tray ends.

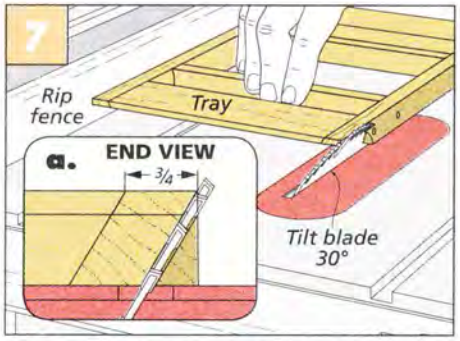


**Edge Bevel Cut.** Tilt the table saw blade, then rip both edges of the tray to complete the bevels.

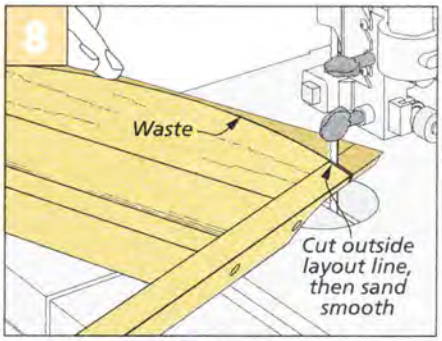


**Cut the Arcs.** Finally, lay out arcs on the tray ends and cut them to shape at the band saw.

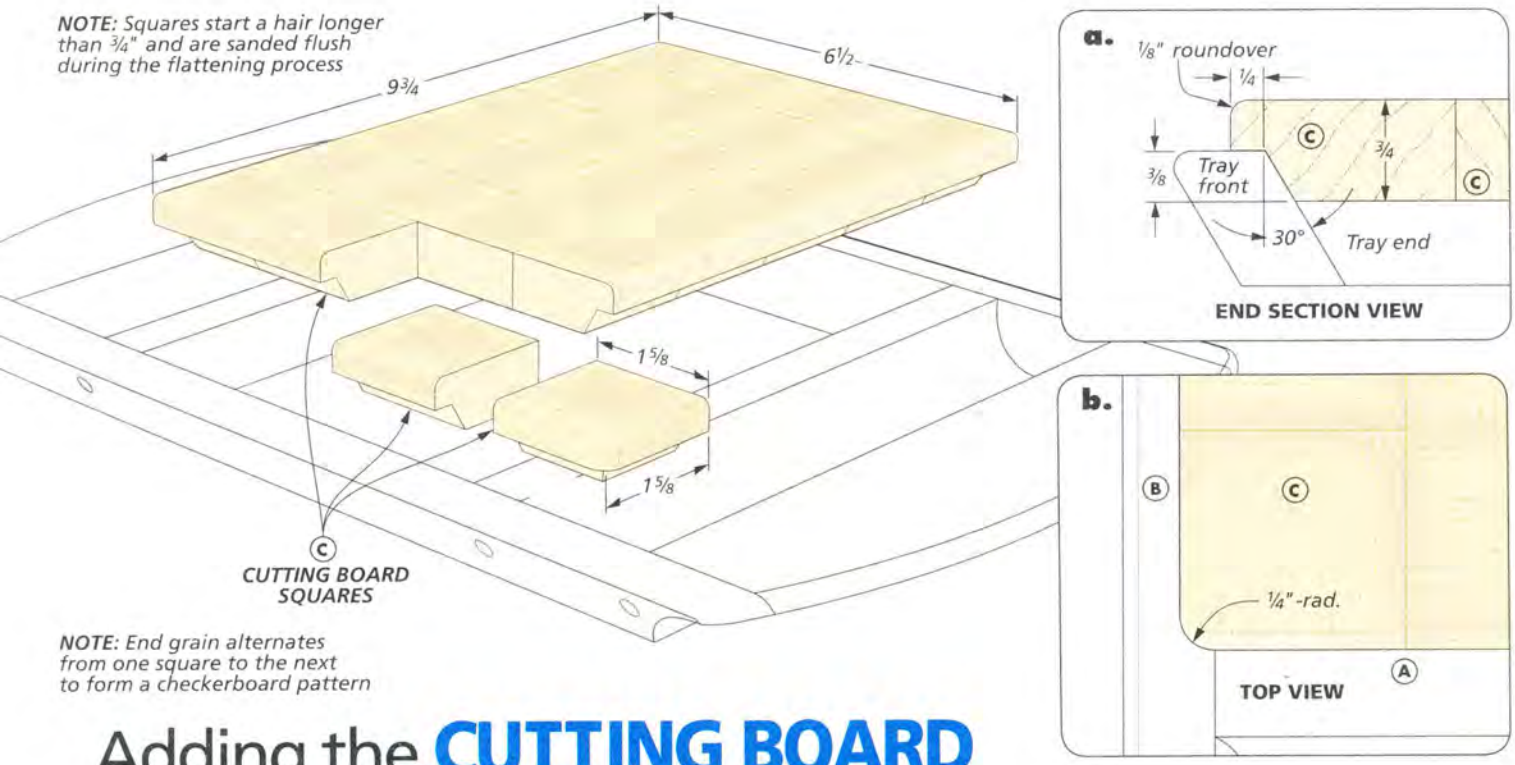


# Adding the **CUTTING BOARD**

With the tray complete, you can turn your attention to the small cutting board that fits in the center. It's built up from small maple squares that are glued together with the end grain exposed at the top and bottom.

**PREPARE YOUR STOCK.** You'll need to cut out a series of squares — 24 in all — to assemble the cutting board. So you'll want to start with a piece of 8/4 stock and rip and plane it until the blank is 1⅝" square (Figure 1 below).

**CROSSCUT SQUARES.** The next stop is the table saw, where a simple setup ensures that you cut all the squares to a consistent length (Figure 2). Though the finished thickness of the cutting board is ¾", you'll note that I left these pieces just a hair longer at this point. There is a simple reason: Once the cutting board is all glued together, it requires a bit of sanding to get it completely flat and smooth.

To cut the squares, I clamped a wide, L-shaped stop block to the rip fence, well ahead of the blade. This wider block allows plenty of clearance between the rip fence and the blade, so the squares won't get trapped and bind when you cut them away from the blank. After setting the rip fence, you simply butt the blank against it and cut out the square, as shown in Figure 2. Now repeat the process to make all the squares.

**GLUEUP JIG.** With all the squares cut to size, it's now time to turn your attention to the glueup. It's difficult to align this many pieces in a single glueup, so I used the glueup jig and a specific sequence to assemble the cutting board. The box on the opposite page provides the details.

The jig is fairly simple to put together. It has a base with two fixed fences that are joined at the corners in an L-shape. I waxed these pieces well to ensure that the blocks wouldn't stick to them. Two separate hardwood strips are used as clamp cauls on the other end and edge of the assembly.

**GLUING UP THE BOARD.** When building the cutting board, you'll work on one row at a time, gluing together a section of four squares before moving on to the

## How-To: PLANE & CUT SQUARES

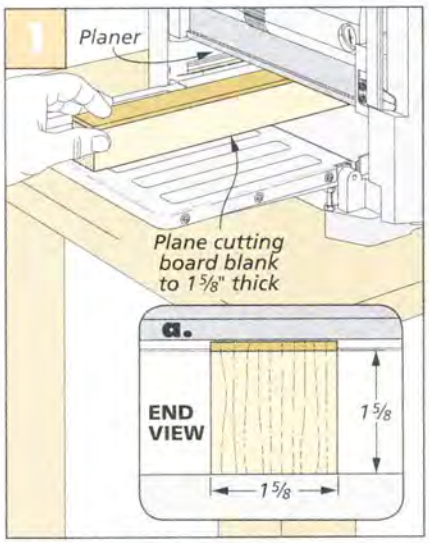


**Plane It Square.** A thickness planer is the perfect tool for forming a perfectly square blank.

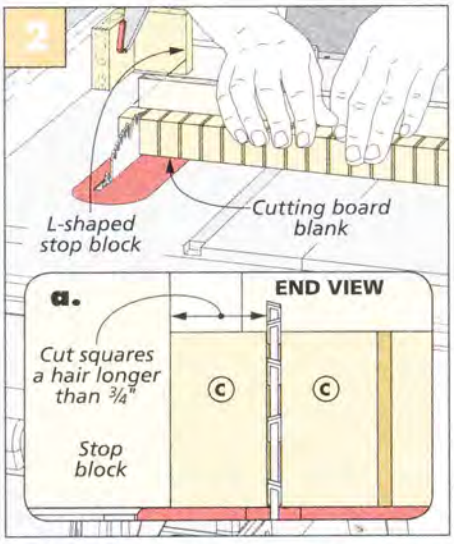


**Crosscut Squares.** Clamp a stop block to the rip fence, and make multiple passes to cut out the board squares.

next row of squares. You'll want to alternate the grain direction from one square to the next as you add them to the glueup. This doesn't impact the strength of the glueup, but it does make the cutting board look a lot nicer.

Once you have a row of four squares glued together, add the cauls and clamp across them, as shown in Figure 1 on the right. Then wait about 30 minutes, remove them from the jig, and clean up the glue squeezeout with a scraper and some sandpaper.

Now repeat the process, adding another row of squares (Figure 2), waiting 30 minutes, and cleaning up the assembly. Continue adding rows this way until the cutting board is complete.

**SAND IT SMOOTH.** Using the glueup jig should keep the cutting board fairly flat, but some sanding will still be necessary after the fact to flatten and smooth the board. The perfect tool for the job is a stationary drum sander. But if you don't have one, some adhesive-backed sandpaper fixed to a flat surface, such as a table saw top, does the job nicely.

**BEVELED RABBET.** The next step is to cut a beveled rabbet along the bottom of the cutting board to make it fit into the opening in the tray. The process for forming this is shown in Figures 3 and 4. I cut the rabbet first with a dado blade, and then tilted a standard saw blade to form the bevel.

**ROUNDOVER & RADIUS.** The cutting board is nearing completion. A few more details include a radius that is sanded at each corner, and a small roundover around the perimeter of the top to ease the edges (Figure 5).

**FINISHING TOUCHES.** I recommend butcher block oil as a nice finish for both the tray and cutting board. It's a food-safe solution that can be cleaned with soap and water. It's also easy to reapply in the future after the tray and cutting board have seen a lot of use.

**A TRAY TO ENJOY.** And plenty of use is what your great-looking new serving tray and cutting board are sure to see. Once your friends and family get a look at your cool new project at a gathering, they're sure to ask for repeat appearances. It's one project where the results are almost as delicious as what you serve on top of it. WW

## How-To: BUILD THE CUTTING BOARD

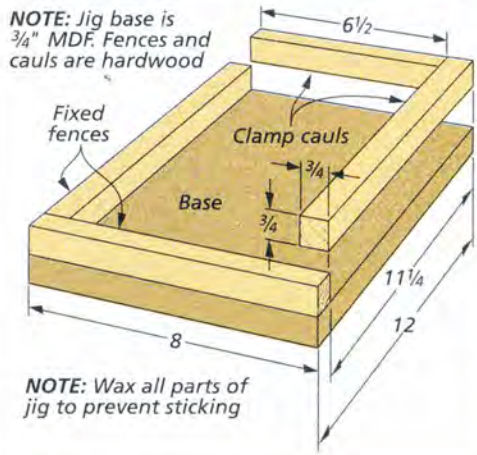


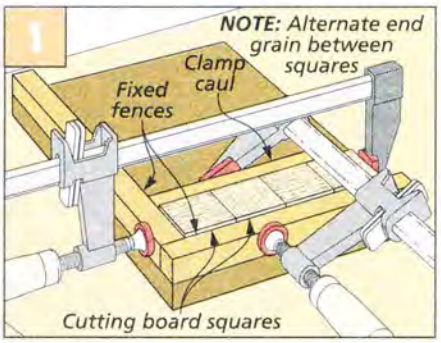


**Glue Up a Row.** Glue the first row of squares together, and apply the short caul and clamps to hold them.

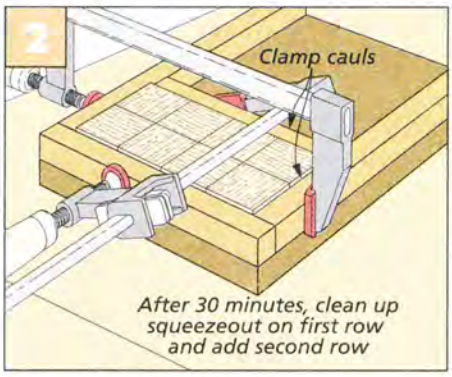


**Repeat the Glueup.** Repeat the process to add the subsequent rows of squares until the board is complete.

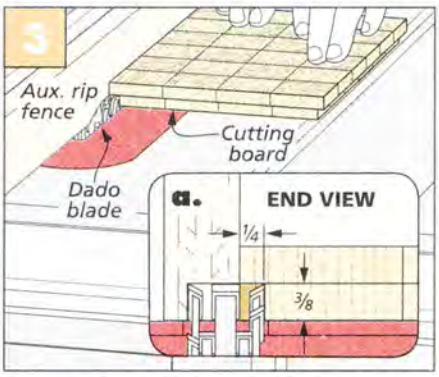


**Cut Rabbet.** A dado blade buried in an auxiliary rip fence makes quick work of cutting the rabbets.

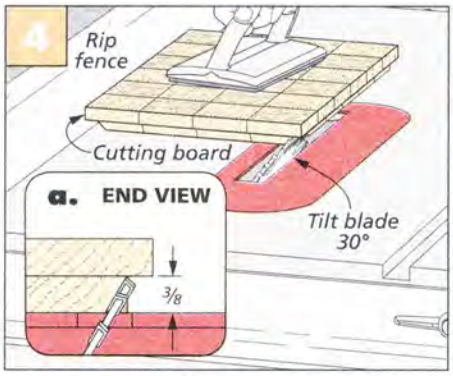


**Bevel Edges.** Now tilt a standard blade and bevel the rabbets on all four edges of the cutting board.

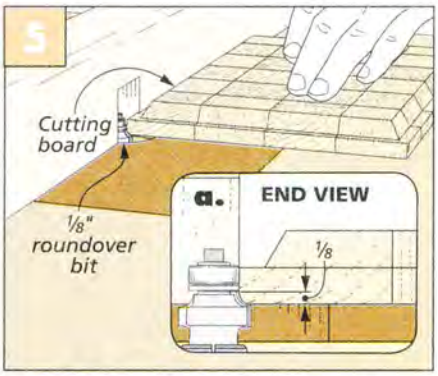


**Rout a Roundover.** Rounding the ends and edges at the router table completes the cutting board.

## Materials, Supplies & Cutting Diagram

| | | | | | |
|---|---|---|---|---|---|
| **A** | Tray Ends (2) | 1 x 5¾ - 9¼ | **C** | Cutting Bd. Squares (24) | 1⅝ x 1⅝ - ¾ |
| **B** | Tray Front/Back (2) | 1 x 1⅜ - 17½ | • | (1) ¼"-dia. x 18" Cherry Dowel | |

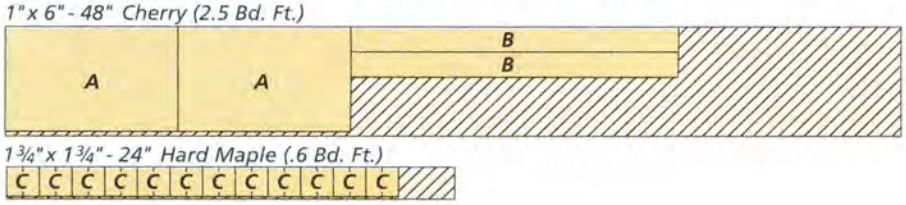

Designer Project

# Tower Bookcase

Featuring a classic look with plenty of style and storage, this two-tone finished bookcase is sure to look at home in almost any room in the house.

Many years ago, one of the first woodworking projects I ever attempted was a bookcase. Thinking I knew a thing or two about style, I designed it myself. Surprisingly, I ended up using some of the same techniques shown here — a plywood case with adjustable shelves, shelf standards recessed in grooves in the case sides, and a solid-wood face frame to cover the exposed plywood edges. But that is where the similarities end.

Sure, my bookcase worked for its intended purpose. I mean, it held books. But it was completely utilitarian in appearance. Fast-forward to this beautifully designed bookcase, and you can see how some small details and the right molding treatments can take an ordinary bookcase and make it look special.

The first thing that catches your eye on this project is the two-tone finish. While the top cap and back panel have a cherry finish, the rest of the bookcase is painted. This allowed me to use inexpensive poplar lumber on the face frame and moldings.

The stiles on the front of the case have evenly spaced stopped flutes. While these may look complicated, I'll show you how to make them in the shop with a handheld router and a simple-to-build jig.

Finally, moldings are applied to the base and top of the bookcase. But don't worry if these moldings look difficult to make; I used some standard moldings purchased from a home center to speed up the build process. With simple construction and eye-catching details, this project is sure to be a favorite.

# Construction Overview / OVERALL DIMENSIONS: 27¾"W x 15⅝"D x 72"H

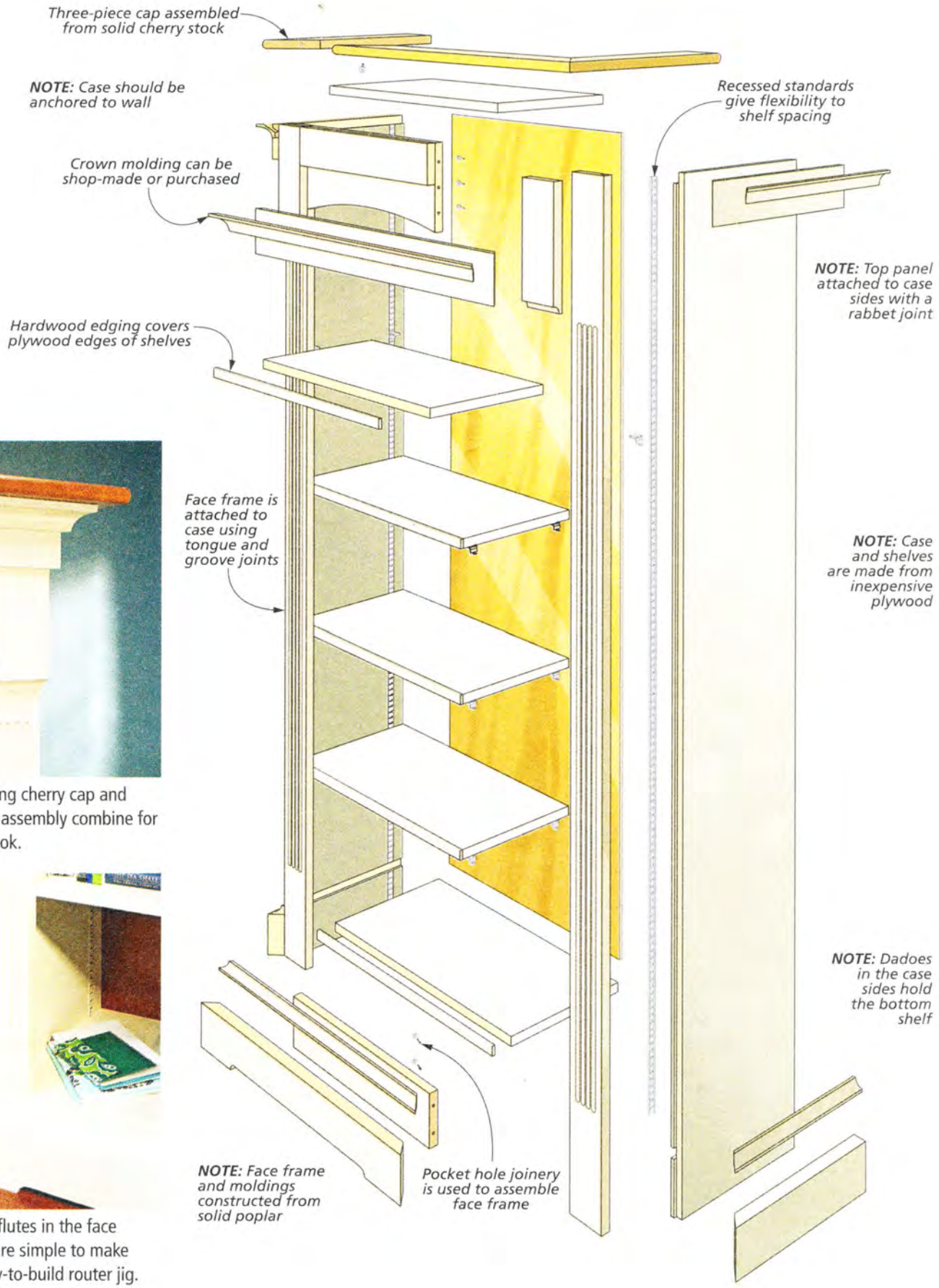

▲ The contrasting cherry cap and painted case assembly combine for an elegant look.

▲ The stopped flutes in the face frame stiles are simple to make using an easy-to-build router jig.

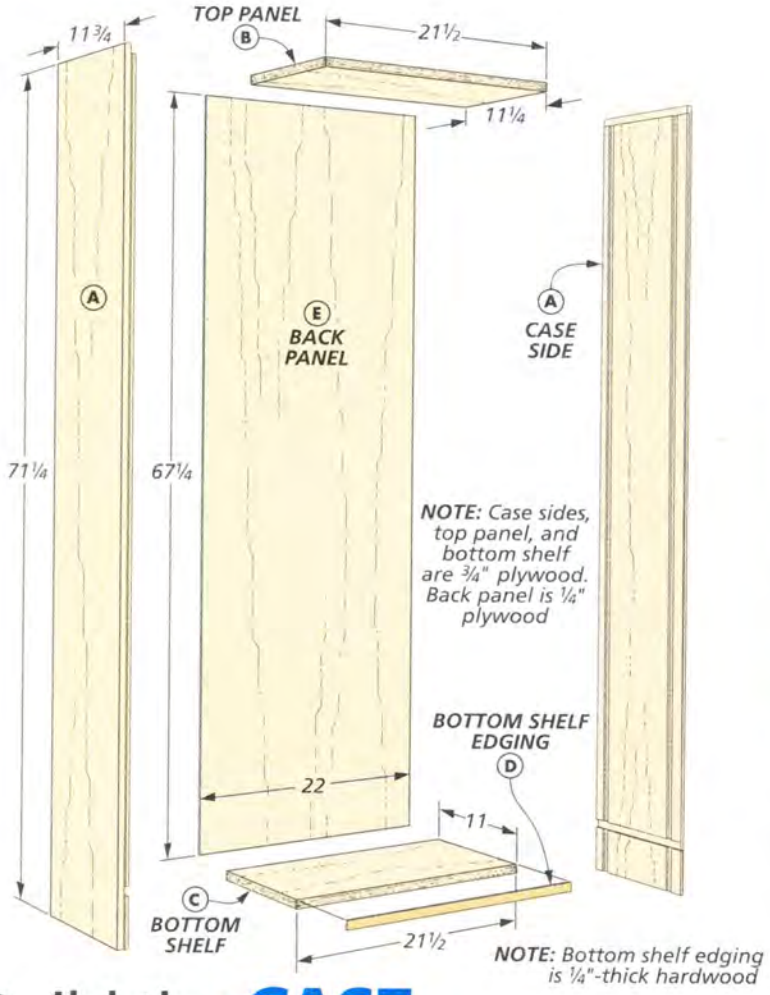


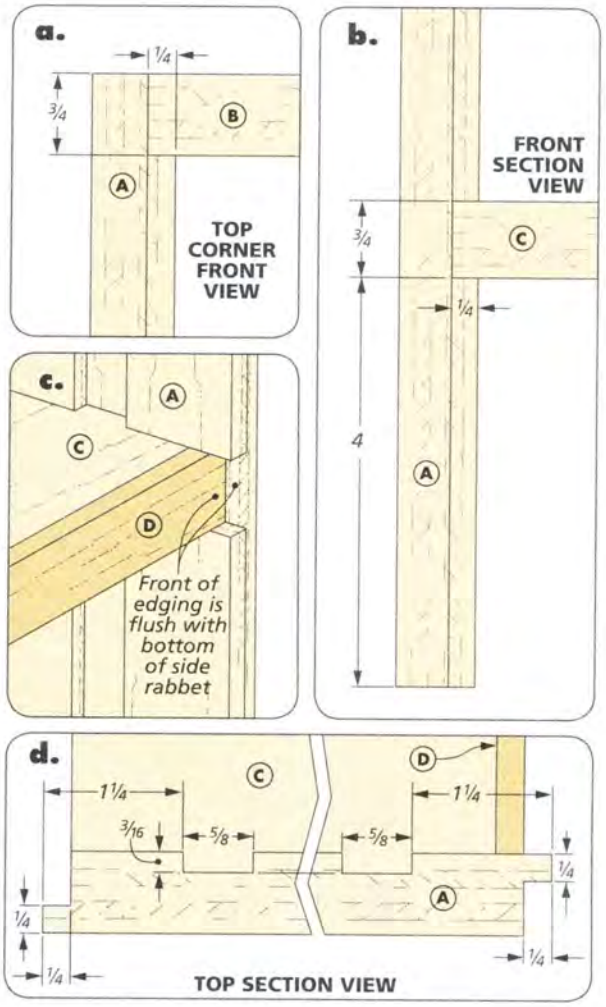


# Build the **CASE**

The bookcase starts off as a plywood case, with dadoes and rabbets in the case sides to house the bottom shelf and top panel. Rabbets are also cut along the front and back edges of the case sides. The rabbet on the back edge supports the back panel later on. The rabbet on the front edge forms a tongue that the face frame will eventually fit over. A couple of grooves on the inside face of the case sides allow a pair of metal shelf standards to sit flush with the surface.

## **How-To:** ROUT DADOES & RABBETS

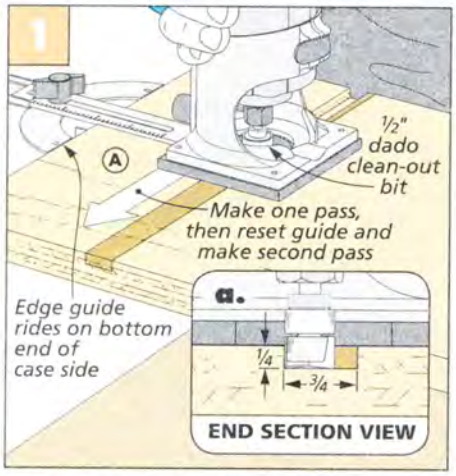


**Rout Dado for Bottom Shelf.** An edge guide attached to the router makes quick work of these dadoes.

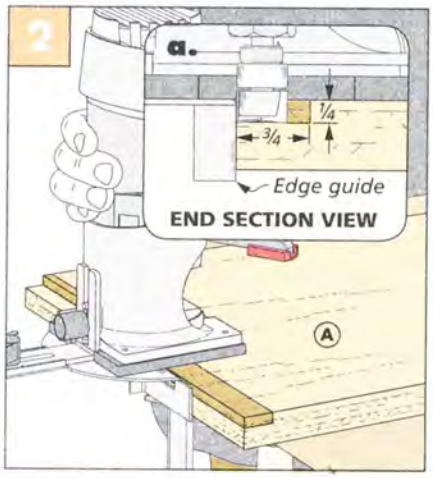


**Rout Rabbet for Top Panel.** Adjust the edge guide to cut the rabbets on the top inside face of each case side.

**MATERIAL.** Just a quick note about the material. With the exception of the back panel and the top cap, I painted the entire bookcase. If you choose the same finishing method, it's not necessary to use the highest quality plywood available. A smooth plywood that will take paint well, like birch or maple, is all that is needed. For my case, I used some less expensive maple plywood.

**THE CASE.** The case is made up of two sides, a top panel, bottom shelf, and back panel. The bottom shelf is slightly narrower than the top panel to allow for the edging you'll add later. The back panel is used to keep the case square during assembly, but don't cut it to size just yet. You'll do that after the case is dry assembled later on.

**DADOES & RABBETS.** After cutting the plywood panels for the sides, top, and bottom shelf to size, I decided to tackle the dadoes and rabbets in the case sides first. Since the case sides are each six feet long, it would be difficult to form these with a dado blade at the table saw. Instead, I opted to cut them using a router and an edge guide as shown at left.

**GROOVES.** Next I turned to the table saw equipped with a dado blade to cut the grooves for the shelf standards (Figure 1). It's a good idea to have the shelf standards you're going to use on hand before making these cuts. This allows you to size the grooves so the standards fit snug. A few test cuts in a scrap piece are a good idea before making the final cuts in the case sides.

**MORE RABBETS.** With the dado blade still in the table saw, it's simply a matter of adding an auxiliary rip fence to make the rabbets on the front and back edges (Figure 2). Since these rabbets are mirror images of one another (detail 'd'), you can use the same setup for both cuts. After making the first cut, just flip the board to the other face and make the second pass.

**SHELF EDGING.** When the bookcase is assembled, a small portion of the bottom shelf's front edge will be exposed above the cove molding. Because of this, a hardwood strip is used to cover the plywood edge. To safely rip this edge strip to size, I used the method shown in Figure 3, at right.

This technique consists of a wide sled with a stop tacked on the end. Set the sled against the rip fence with the other edge positioned ¼" from the blade and lock the fence in position. Now it's easy to safely rip the thin strip from a wider workpiece. While I had this setup in place, I ripped the edging strips for the five adjustable shelves at the same time and then set them aside.

The hardwood strip is glued to the bottom shelf and tacked in place with a pin nailer. The last step is to trim the edging flush with the face of the shelf. The quickest way to do this is to use a router and flush-trim bit (Figure 4). The flush-trim bit leaves a nice, clean edge. To keep the router from tipping on the narrow edge, I clamped a wide board to the shelf for more support.

**DRY RUN.** Assembling the case isn't complicated. But it does require a large, flat worksurface and a little patience. A couple support boards placed under the case sides allow plenty of room for the clamps to slide underneath. And two cauls at the bottom provide adequate pressure on the shelf.

Start by dry assembling the sides, top panel, and bottom shelf. Be sure the top panel and bottom shelf are oriented correctly, and they line up with the rabbet on the front edge, as shown in detail 'c' on the opposite page. You can now measure the opening in the back and cut the back panel to size.

**GLUE IT UP.** Glue the bottom shelf and top panel in place and drop the back panel in position to keep the whole assembly square. (Don't fasten it down yet.) Add the cauls and clamps, and the basic case is completed.

## How-To: GROOVES, RABBETS & EDGING

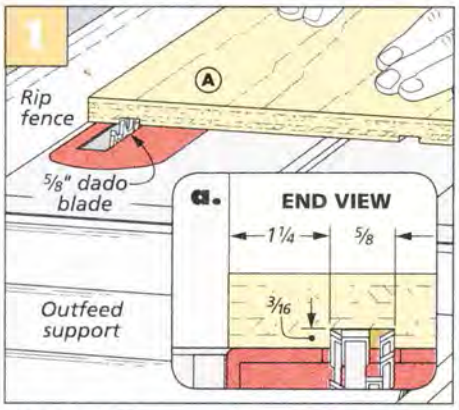


**Cut the Grooves.** Use a dado blade in the table saw to cut the grooves that house the shelf standards.

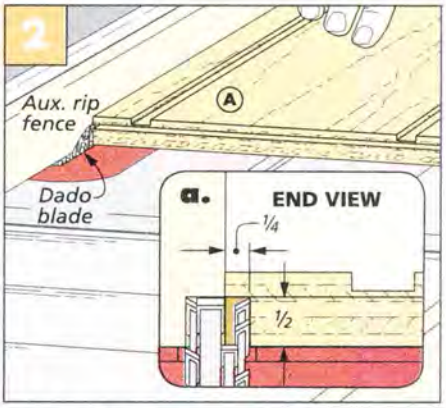


**Rabbets.** Bury the dado blade in an auxiliary rip fence to cut the rabbets on the front and back edge.

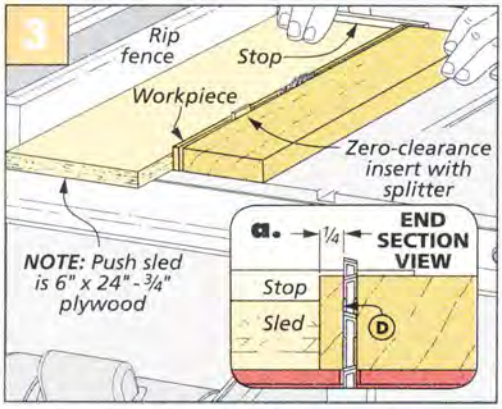


**Cut the Panel & Shelf Edging.** This setup allows the thin edging strips to be cut at the table saw safely.

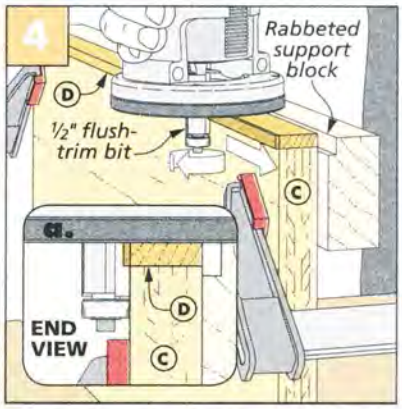


**Flush Trim the Edging.** A flush trim bit in the router leaves a clean edge on the bottom.

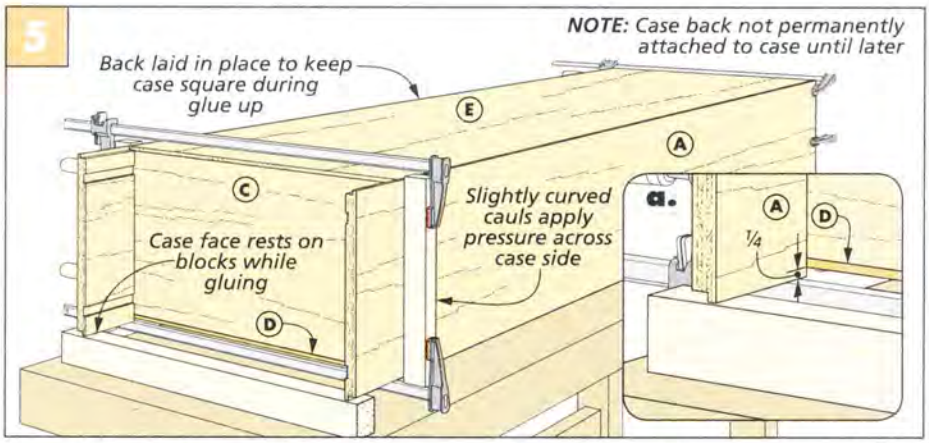


**Assemble the Case.** A pair of riser blocks gives clearance for the clamps. Use a pair of cauls to apply even pressure across the case side at the bottom shelf's position. The back panel works great to keep the whole assembly square.

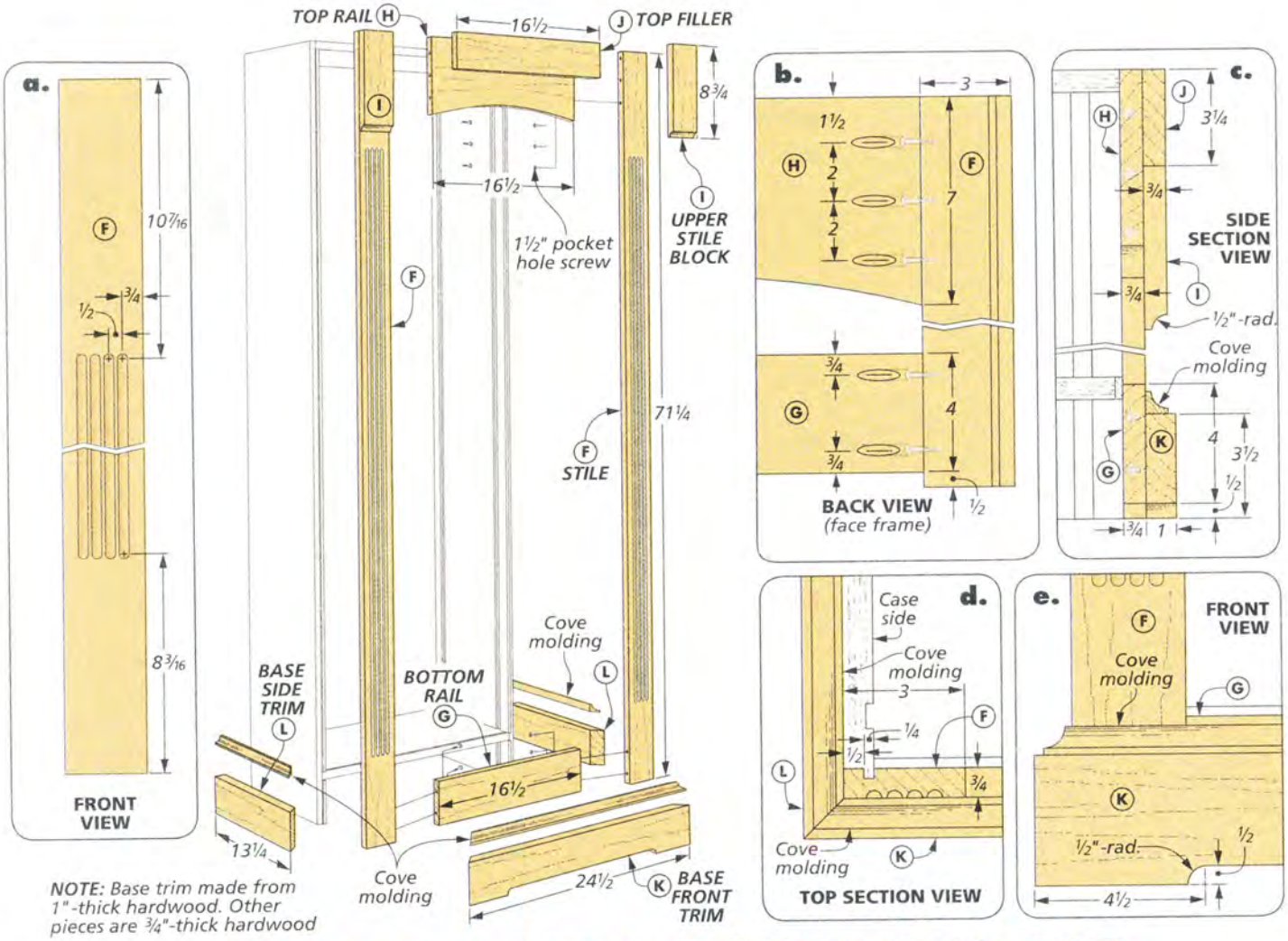


# Add the FACE FRAME & BASE MOLDING

With the case built, you can turn your attention to making the face frame pieces and adding some trim and molding. Rather than installing the face frame parts one at a time, pocket hole screws are used to hold the entire assembly together (detail 'b') before it's attached to the case. Three upper trim parts are glued to the face frame. They add some depth to the frame, as well as provide a place to mount the crown molding later on. But first, start with the stiles.

**FLUTED STILES.** Each of the face frame stiles has four decorative stopped flutes on its face. These flutes are formed using a core box bit and a plunge router. In order to keep the spacing between each of the flutes consistent, I built a simple jig that attaches to my router. Shop Notebook on page 30 shows how to build this jig.

**USING THE JIG.** After making the jig and cutting the stiles to finished size, clamp one of the stiles to a flat surface. Position the start and stop blocks as shown at left. Use a square to ensure they are 90° to the edge.

To rout the first flute, position the jig's spacers as shown in detail 'a,' at left. Set the bit to the depth of the flutes and make the first pass, moving from one stop block to the other.

Now it's just a matter of moving the next spacer in line to the other side of the jig, locking it in place, and making another pass. Do this for the final two flutes. The setup for the last flute is shown in detail 'b.' I found it beneficial

## How-To: CUT STILE FLUTES

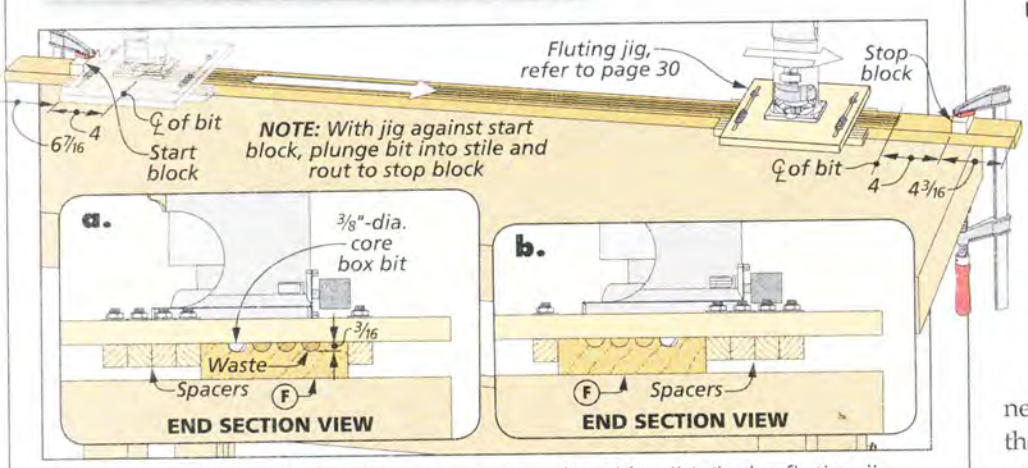


**Using Fluting Jig.** After initial set up is complete (detail 'a'), the fluting jig allows you to rout all of the flutes by moving one spacer after each pass.

to use a test piece the same width as the stile to get a feel for using the jig.

There is just one last thing to do to each of the stiles, and that's to cut a groove on the back face to fit over the tongue on the front edge of the case. Since plywood thickness can vary, it may be necessary to adjust the location of this groove so the edge of the stile ends up flush with the outside of the case. This allows you to avoid trimming the edge of the stile and making the flutes appear off-center.

**RAILS.** The bottom and top rails can now be cut to size. To ensure a perfect fit, I set the stiles in position on the case and measured between them. Figure 2 at right shows the layout for the gentle curve on the bottom edge of the top rail. This is easy to cut at the band saw.

**ASSEMBLY.** The face frame is held together with pocket hole screws. Drill the holes for the screws and then assemble the face frame as shown in Figure 3. (Note that the bottom rail is not flush with the bottom edge of the stile.) The face frame now gets glued and clamped to the case.

**FILLER & STILE BLOCKS.** Next, I built up the top of the case with two stile blocks and a filler. The stile blocks receive a cove profile on their bottom edges. These are easy to make at the router table using a cove bit as shown in Figure 4 at right. Glue and clamp these three parts to the face frame, flush with the top edge of the case.

**BASE TRIM.** To give the bookcase a more substantial-looking base, I added some base trim pieces cut from thicker stock. The front piece gets a decorative profile cut on the bottom edge. I formed this profile in two steps.

First, I clamped a scrap piece of wood to the bottom of the trim (Figure 5) and drilled the corners of the profile using a Forstner bit. Then it's just a matter of using a straight bit in the router table to remove the waste between the edges (Figure 6). Since this is thick material, I made several passes to complete the cut. Now simply miter the corners and attach the base trim with glue and clamps.

**COVE MOLDING.** Since the cove moldings on the base of the bookcase are painted, I opted to use molding purchased from the home center (see Sources on page 51). After mitering the ends, the cove pieces are glued and tacked in place.

## How-To: MAKE FACE FRAME & TRIM

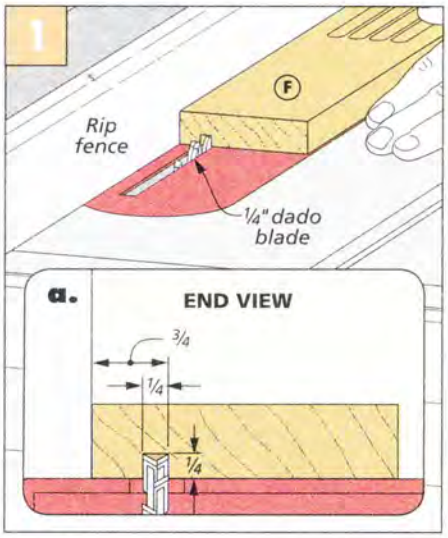


**Cut Grooves.** Locate grooves on back of stiles so outside edge is flush with the outside face of the sides.

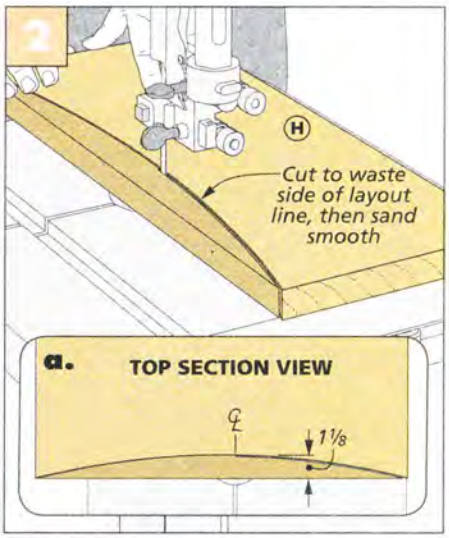


**Create the Curve.** The top rail of the face frame has a gentle curve formed on the bottom edge at the band saw.

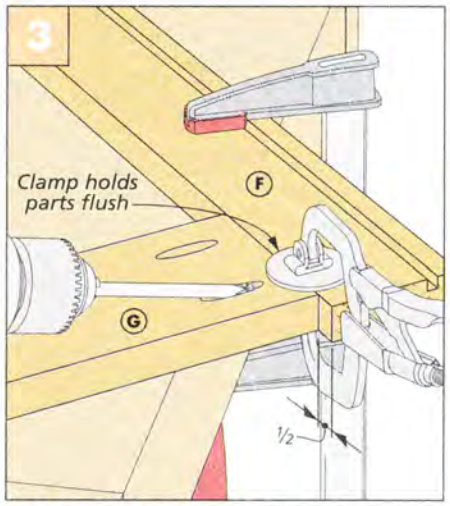


**Assemble the Face Frame.** Some pocket hole screws on the back face of the frame hold it together.

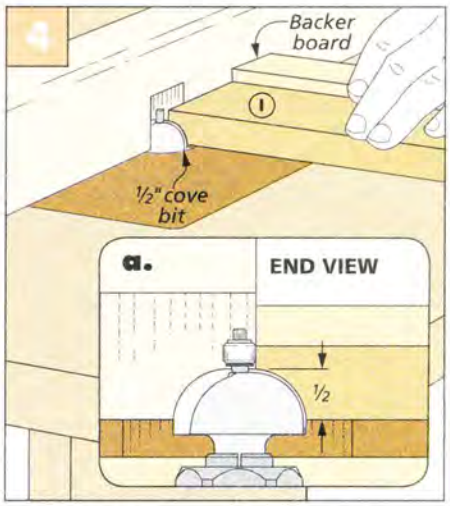


**Stile Blocks.** A cove profile on the bottom edge of the stile blocks is simple to make at the router table.

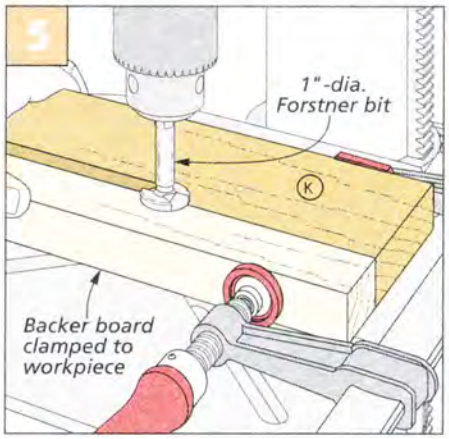


**Base Profile.** Form the ends of the profile with a Forstner bit, using a backer board for support.

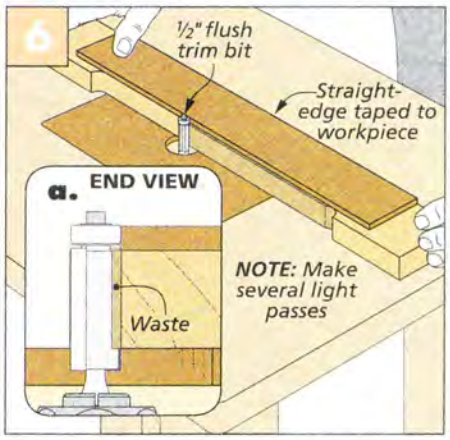


**Clean Up the Waste.** A straight bit in the router table takes care of the remaining waste. Take light cuts.

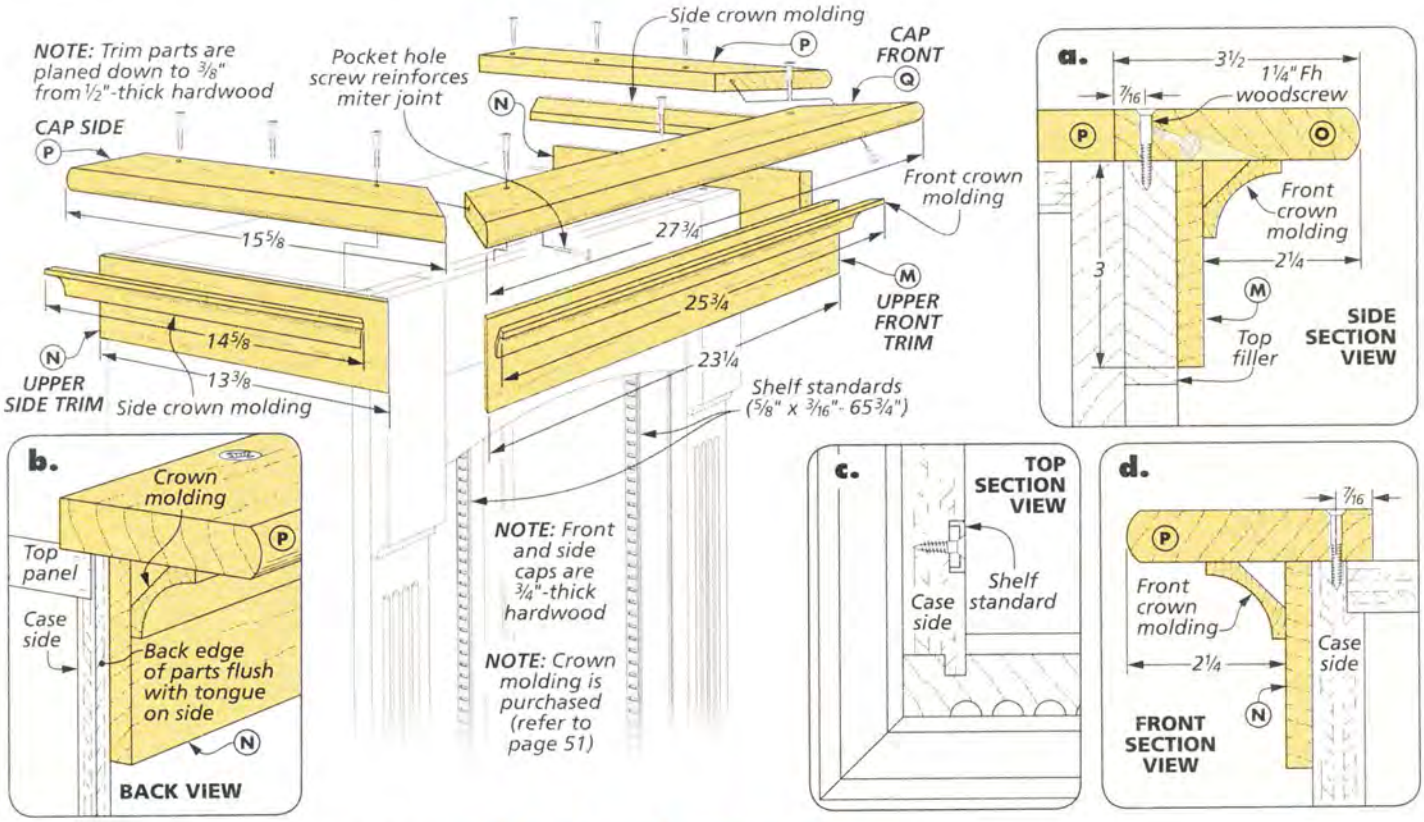


# Completing the **BOOKCASE**

With the base molding complete, there are just a few more components to add to the bookcase. The adjustable shelves are cut to size and banded with a hardwood strip on the front edge. The back panel gets finished and installed. And like the bottom of the case, the top receives a built-up treatment also. It consists of some trim pieces, cove molding, and an assembled cap with a bullnose profile that wraps around the entire top edge of the case. I started with the trim.

**MAKE THE TRIM.** The three trim parts can be planed down from thicker material. Rip the pieces to final width, but leave them a little long. The corners of these parts will need to be mitered where they meet at the front edges. I let the side pieces run long at the back and then cut them to length once I had a good fit at the corners. Then it's just a matter of gluing them in place.

**CAP IT OFF.** The parts for the cap should also be left a little long after they are ripped to final width. The left box below shows the setup to rout the bullnose profile on the front edge of these pieces. I opted to rout the bullnose before assembling the cap to avoid any tearout issues at the corners.

With the bullnose routed, miter the front corners and screw the parts together using pocket hole screws (center drawing below). Be careful to keep the screwholes well back from the front edge so they aren't visible from below.

## How-To: MAKE THE UPPER MOLDING

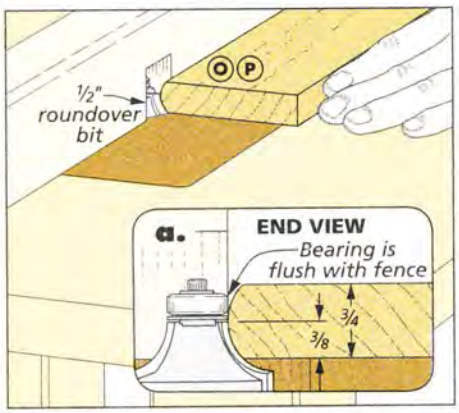


**Bullnose.** Position the bottom edge of a roundover bit bearing as shown. Rout both faces to make the profile.

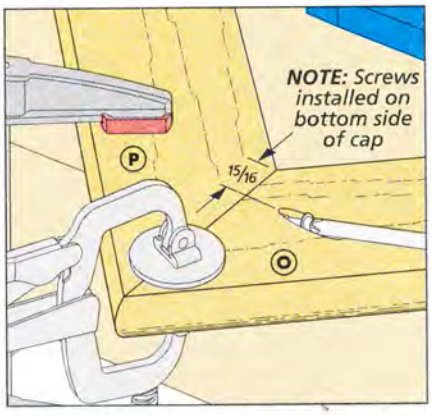


**Assemble Cap.** Pocket hole screws secure the cap pieces. Be sure to keep holes back from the edges.

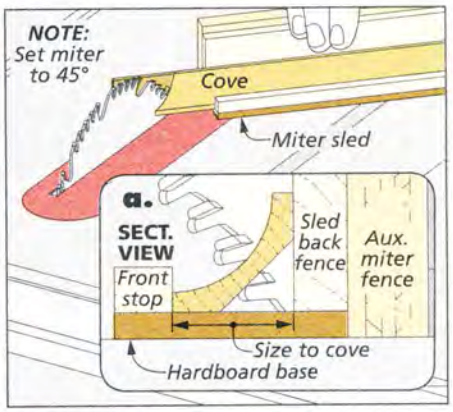


**Miter Cut Sled.** This simple sled is used to make the compound miter cuts on the crown molding.

Since the cap is a stained and the crown molding below it is painted, I didn't install the assembled cap just yet.

**CROWN MOLDING.** Like the cove molding on the base of the bookcase, I purchased the crown molding for the top, as well. The right hand box at the bottom of the opposite page shows the simple sled I used to make the mitered cuts on the corners of the molding.

Without the cap in place, I needed another flat surface for the crown molding to butt against while I installed it. I found that a piece of plywood with the same outside dimensions as the assembled cap worked perfectly. With the plywood clamped across the top, I could then use some brads to nail the bottom edge of the crown molding to the trim and face frame.

**SHELVES.** The five adjustable shelves are made in the same manner as the bottom shelf. The poplar edge strips are glued and pinned in position and then trimmed flush with a router. Set the shelves aside for finishing.

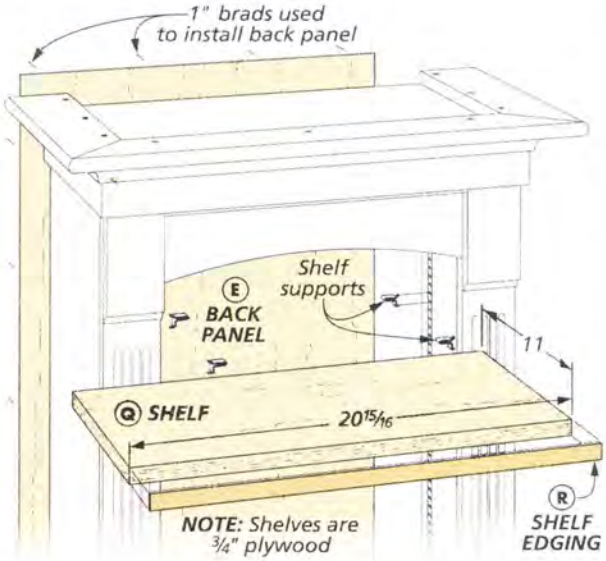


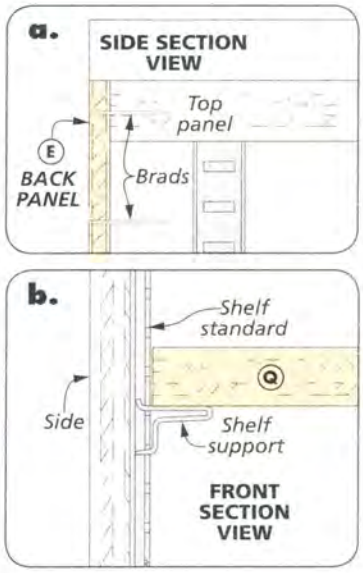


**FINISH.** I opted to paint the shelf standards the same color as the bookcase. So now is a good time to install them. I then applied three coats of a water-based paint to the entire bookcase. The back panel and assembled cap are stained and finished. To see more about the finishing process, refer to Sources on page 51.

**ASSEMBLE.** With the finishes applied, I nailed the back panel in place with some brads. I then screwed the cap to the face frame and case sides through predrilled holes. All that's left is to install the shelf support clips in the standards and position the adjustable shelves to your liking.

## Materials, Supplies & Cutting Diagram

| | | | | | |
|---|---|---|---|---|---|
| **A** Case Sides (2) | 3/4 ply. - 11 3/4 x 71 1/4 | **J** Top Filler (1) | 3/4 x 3 1/4 - 16 1/2 | • (12) 1 1/2" Pocket Hole Screws |
| **B** Top Panel (1) | 3/4 ply. - 11 1/4 x 21 1/2 | **K** Base Front Trim (1) | 1 x 3 1/2 - 24 1/4 | • (5 lin. ft.) 3/4" Cove Molding |
| **C** Bottom Shelf (1) | 3/4 ply. - 11 x 21 1/2 | **L** Base Side Trim (2) | 1 x 3 1/2 - 13 1/4 | • (44) 1" Brads |
| **D** Bottom Shelf Edging (1) | 1/4 x 1 rgh. - 21 1/2 | **M** Upper Front Trim (1) | 3/8 x 3 - 23 1/4 | • (5 lin. ft.) 1 1/4" Crown Molding |
| **E** Back Panel (1) | 1/4 ply. - 22 x 67 1/4 | **N** Upper Side Trim (2) | 3/8 x 3 - 13 3/8 | • (4) 5/8" x 72" Shelf Standards w/Screws |
| **F** Stiles (2) | 3/4 x 3 - 71 1/4 | **O** Cap Front (1) | 3/4 x 3 1/2 - 27 3/4 | • (16) Shelf Supports |
| **G** Bottom Rail (1) | 3/4 x 4 - 16 1/2 | **P** Cap Sides (2) | 3/4 x 3 1/2 - 15 5/8 | • (9) 1 1/4" Fh Woodscrews |
| **H** Top Rail (1) | 3/4 x 7 - 16 1/2 | **Q** Shelves (4) | 3/4 ply. - 11 x 20 15/16 | |
| **I** Upper Stile Blocks (2) | 3/4 x 3 - 8 3/4 | **R** Shelf Edging (4) | 1/4 x 1 rgh. - 20 15/16 | |

*3/4" x 7 1/4" - 96" Poplar (4.8 Bd. Ft.)*

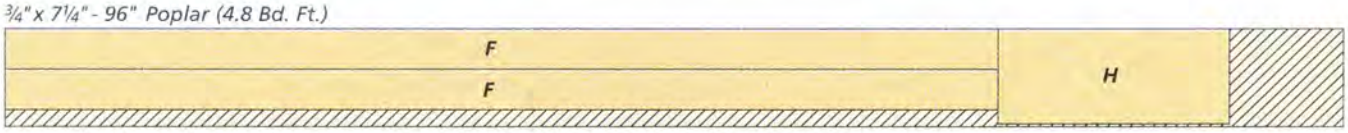


*3/4" x 5 1/2" - 60" Poplar (2.3 Bd. Ft.)*

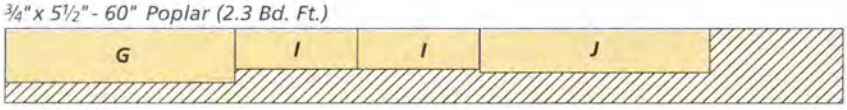


*1" x 5 1/2" - 60" Poplar (2.9 Bd. Ft.)*

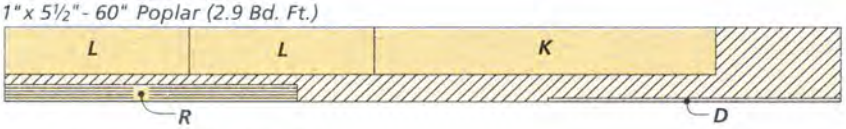


*1/2" x 3 1/2" - 60" Poplar (1.5 Sq. Ft.)*

*3/4" x 5 1/2" - 60" Cherry (2.3 Bd. Ft.)*

***ALSO NEEDED:***
*One - 48" x 96" sheet 3/4" Maple Plywood*
*One - 24" x 96" sheet 1/4" Cherry Plywood*

## Fluting Jig

The bookcase on page 22 has evenly spaced flutes on the face of each of the face frame stiles. A core box bit in a router is the quickest way to form these flutes. I considered using an edge guide attached to my router, but keeping consistent spacing between flutes would have been a real struggle. Not to mention the possibility of the edge guide losing contact with the stile and spoiling the cut. Instead, I built this simple fluting jig to take care of both those issues.

**BUILDING THE FLUTING JIG.** The construction of the jig is fairly simple. It consists of a base and five guide bars all cut from ½" Baltic birch plywood. Two slots along each side of the base allow the guide bars to slide along the bottom of the jig once the hardware is added. These slots are easy to make with a straight bit in the router table.

**GUIDE BARS.** If there's one critical component to the fluting jig, it's the guide bars. The width of the bars needs to be exactly the same as the center-to-center spacing of the flutes on your project — in this case, ½"-wide. After they're cut to size, drill the through holes and countersink for the machine screws.

**ADD THE ROUTER.** All that's left is to drill the hole in the base for the bit to pass through and then mount your router to the base. I simply used the baseplate from my router to mark the mounting holes on the jig base. Details 'a' and 'b' below show how to set up the jig.

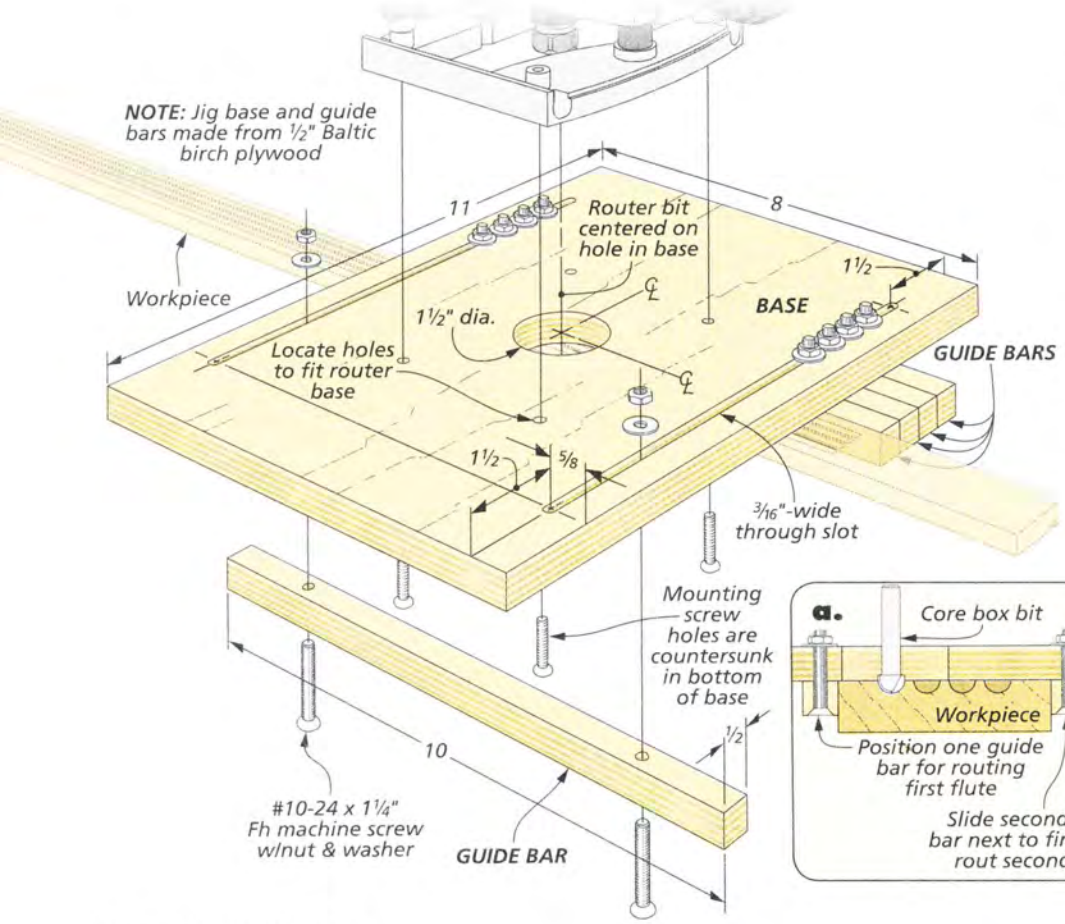


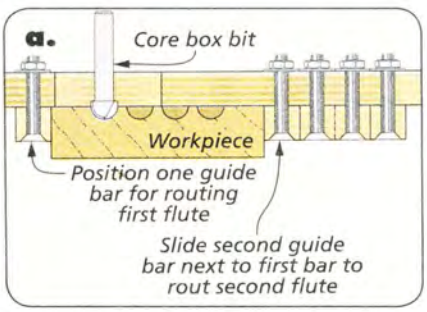


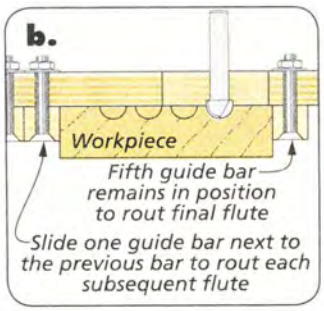

## Adding a Patina

Adding a patina to the metal parts is a great way to give the bride's chest on page 32 an antique look. Best of all, it's very easy to do. You can find out where to get the materials on page 51.

**CLEAN & SAND.** Before you start with the chemicals, you'll need to give the metal a good cleaning and sanding. I started with mineral spirits to remove any film on the steel (there's often an anti-rust coating). A random-orbit sander is perfect for a good scrubbing (Photo 1).

**SPRAY-ON PATINA.** In Photo 2 you can see how to spray the solution. I used a block of scrap to hold the brace up off the bench. You'll need to let the fluid pool and sit overnight to develop the color.

**OIL.** The last step, shown in Photo 3, is to brush on a couple coats of oil to protect the patina from chipping. No further finishing is needed.

▲ I used 60-grit paper first, then 100-grit to sand the fresh metal and rough it up a bit for the

▲ The solution starts working as soon as you spray it on. Flood the surface, then let it sit overnight.

▲ A foam brush is perfect for applying the oil topcoat. Give it two coats to protect the patina.

## Hinge Mortise

The torsion hinges I used on the bride's chest are great for keeping the lid from slamming shut. They will hold the lid open at any angle. On top of that, they're a breeze to install. You only need to mortise the top rail on the back.

**TABLE SAW.** Start by laying out the hinge position. Then you can remove most of the waste in between the marks using a dado blade in the table saw and the miter gauge (Figure 1). I used the rip fence as a stop for the inside edge.

**ROUTER & CHISEL.** Figure 2 shows how you can rout away most of the waste for the barrel of the hinge. After that, pare down to the layout line with a chisel (Figure 3). Then all you need to do is install the hinges with screws.

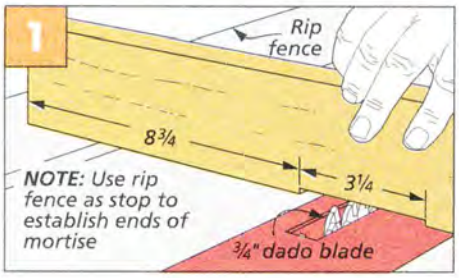


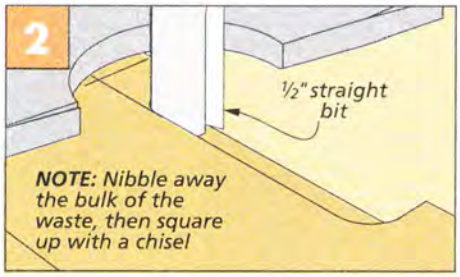


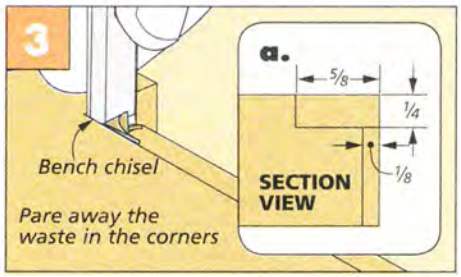


## Corbel Installation

The decorative corbels on the bride's chest complete the Craftsman-style look of the piece. But installing them was kind of tricky. The problem is, you don't want to glue them to the hardwood panels or they could separate from the stiles when the panels expand and contract with seasonal changes in humidity. The solution is to glue them to the stiles only.

**FILLER.** For this assembly, I made a hardboard filler that acts as a temporary shelf to hold the corbel in place (Figure 1). I made the filler by cutting an extra-wide hardboard blank. Trace the curve of the corbel onto the hardboard and cut it at the band saw. Then fit the filler in the groove in the stile and glue the corbel in position (Figure 2).

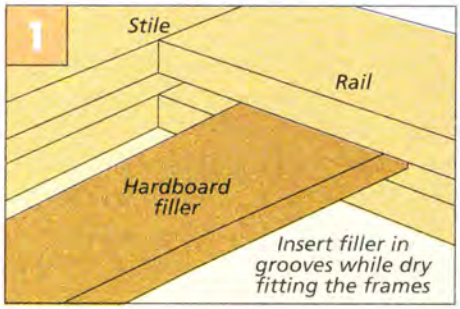


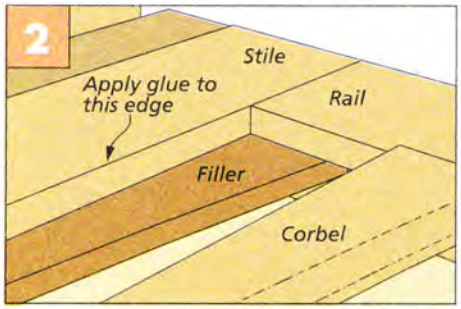


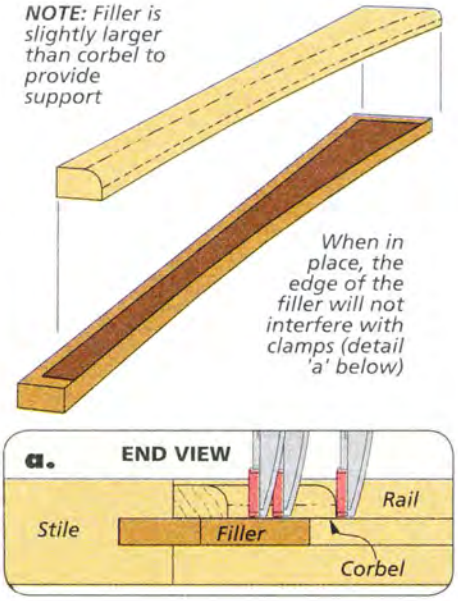

Heirloom Project

# Craftsman-Style Bride's Chest

Functionality and beauty combine in this classic piece of American fine furniture. Best of all, it's every bit as practical as it is attractive.

You don't have to be a new bride to appreciate the beauty and utility of this traditional chest. The Craftsman-style design is loosely based on a Gustav Stickley original from the early 1900s. The design is both timeless and straightforward to build.

The chest not only looks attractive, but it also offers lots of storage. In addition to the large interior space, I added a lift-out tray for keeping smaller items out of the main compartment.

The chest consists of six frame and panel assemblies: the front, back, sides, bottom, and lid. While there are a few subtle differences between the panels, the techniques used to make them all are the same throughout the project. I used straight-grained white oak, the traditional choice for Craftsman-style furniture, for the frames and panels.

Although the woodworking techniques are not unusual, I did try my hand at a bit of metalworking to make the hardware. I was struck by the hand-wrought steel corner braces on the original chest. But when I looked at the options for similar hardware, I wasn't able to find anything comparable.

Instead, I used some steel from the hardware store and a few pyramid-head nails. I found the steel was easy to work using common shop tools, and a few simple metalworking techniques. With the addition of a patina solution, it makes a convincing instant antique.

# Construction Overview / OVERALL DIMENSIONS: 42½"W x 17⅝"D x 22"H

Lift-out tray is perfect for storing smaller items

Torsion hinges prevent fingers from being pinched by holding the lid open in any position

Aromatic cedar tray bottom is a traditional design element

Shop-made metal corner braces add an authentic look to the chest

Each component of the chest is a frame and panel assembly using stub tenon and groove joinery

Straight-grained, solid white oak used for all frame parts and the panels in the front, back, sides, and lid

Aromatic cedar panels in the bottom are glued up from narrower tongue and groove blanks

Decorative corbels are glued to the stiles

Mitered corners are reinforced by hardwood splines to ensure a sturdy, long-lasting joint

Filler strips fit into the grooves at the bottom of the stiles

▲ The lift-out tray features an aromatic cedar bottom. The tray is also divided into three sections for convenient storage.

▲ The process for chemically antiquing the steel braces is pretty straightforward, and the pyramid-head nails add authenticity.

▲ In addition to the quartersawn white oak, the decorative corbels give the chest a classic, Craftsman design element.

# Making the **FRAMES**

The chest is made up of a group of frame and panel assemblies: The front, back, lid, bottom, and two sides. Each one is made up of a hardwood frame and solid-wood panels. This frame and panel design relies on stub tenon and groove joinery, which is both strong and easy to cut at the table saw.

You'll note that the stiles on each of these frames are mitered and splines are added to help with alignment during the glueup. I started by making the front and back frames, then the two sides.

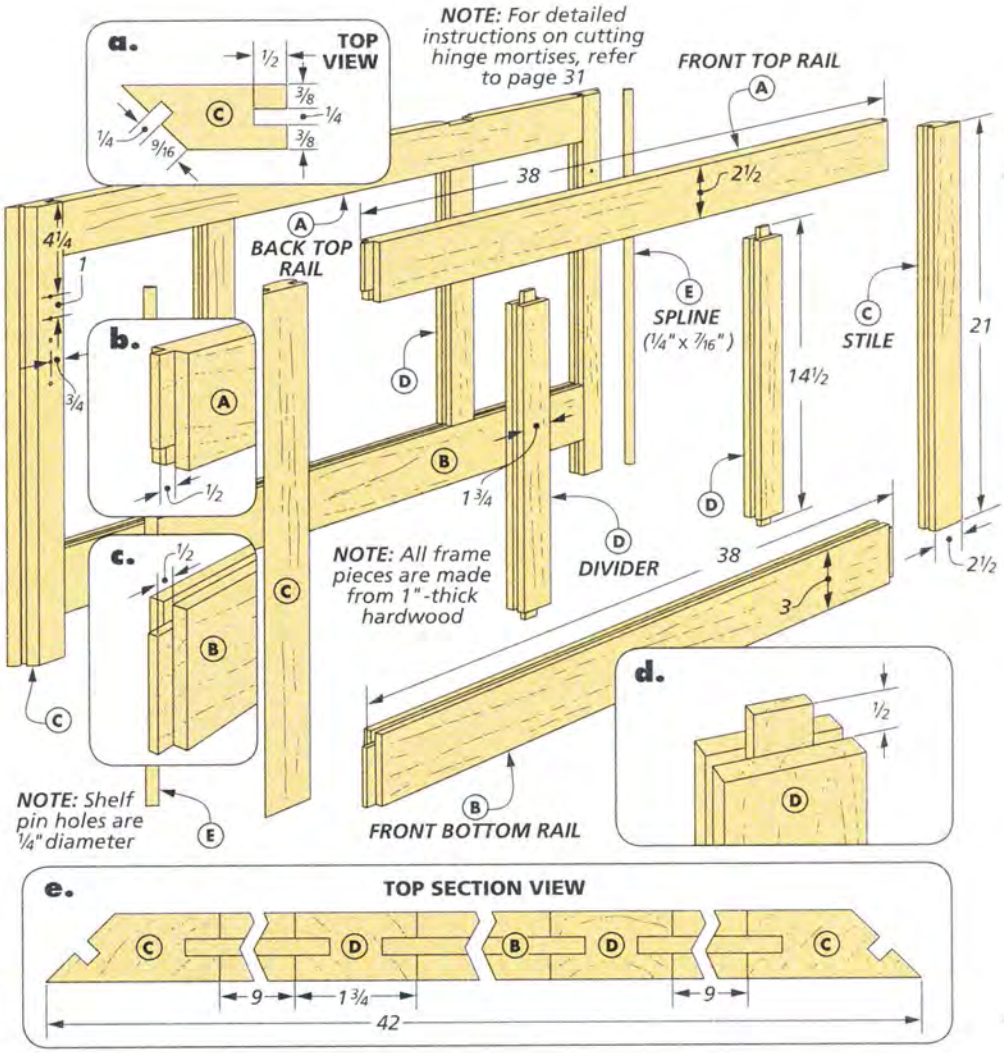


## FRONT & BACK FRAMES

The front and back frames are identical except for the hinge mortises in the back top rail (left drawing below) For more on the hinge mortises, refer to page 31.

**THICKNESS.** I started by planing several 5/4 boards down to a final thickness of 1". The thickness is not only true to the original Stickley design, but it's perfect for a sturdy chest that will potentially see several generations of use.

You can now cut all the rails, stiles, and dividers to final width and length. Note that the stiles for the side assemblies are the same as those used on the front and back. Cut all eight of them plus a couple extra to use as cauls when you assemble the frames. I'll get to the details on that later.

**JOINERY CUTS.** The box below walks you through the process for cutting the grooves and stub tenons needed for the joinery. The center drawing shows how I used a standard rip blade to cut the wide, centered groove for the panels in all the frame pieces.

After that, install an auxiliary rip fence and an auxiliary fence on the miter gauge, as well. The auxiliary rip fence allows you to bury the dado blade for cutting accurate tenons. Test the fit

## How-To: MAKE THE FRAME PARTS

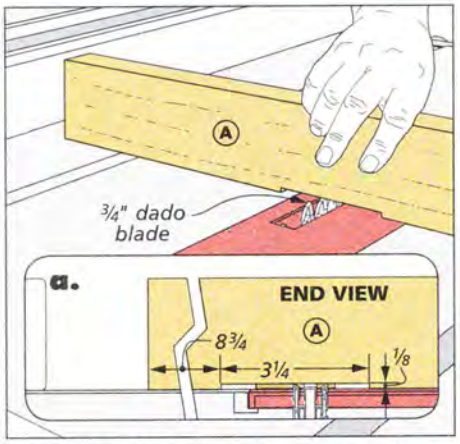


**Hinge Mortises**. With an auxiliary fence on the miter gauge, use the rip fence as a stop to nibble away the waste.

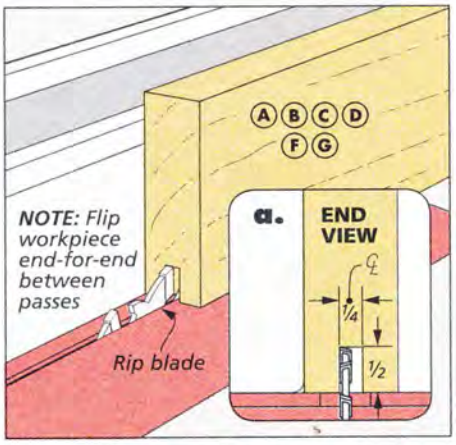


**Centered Groove**. Two passes, each one slightly off-center, allow you to cut a centered groove that will fit the panel.

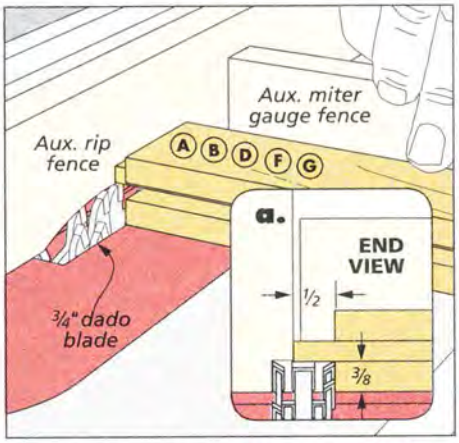


**Tenons**. With the dado blade buried in an auxiliary fence, use a miter gauge to cut the tenons on the frame parts.

of the tenons in the grooves as you go. You're looking for a snug, slip fit. If it's too tight, you run the risk of splitting out the sides of the grooved pieces. Too loose, and the joint may fail.

**MITER THE STILES.** As shown in the drawings, the stiles are mitered and splines are added to reinforce the joints. I started work on them by first mitering each one, including the extras (left drawing in the box below).

Now is a good time to lay out the locations of the dividers (detail 'e,' opposite page). After that, mark the positions for the shelf pin holes on the stiles and drill them. The main drawing on the opposite page shows the locations.

**GROOVE THE MITERS.** In the center drawing below, you can see how I installed a ¼" dado blade and set the angle to 45°. Use this setup to cut the angled grooves in the mitered edges of the stiles. Use test pieces to check the setup of both the blade and fence to match those in detail 'a.'

**SPLINES.** At this point, you're ready to cut the splines that will go in the miters. After resawing some thicker stock and planing it to a thickness of ¼", rip it to final width (right drawing, below). Sneak up on a good fit for the splines. They should slip into the grooves easily.

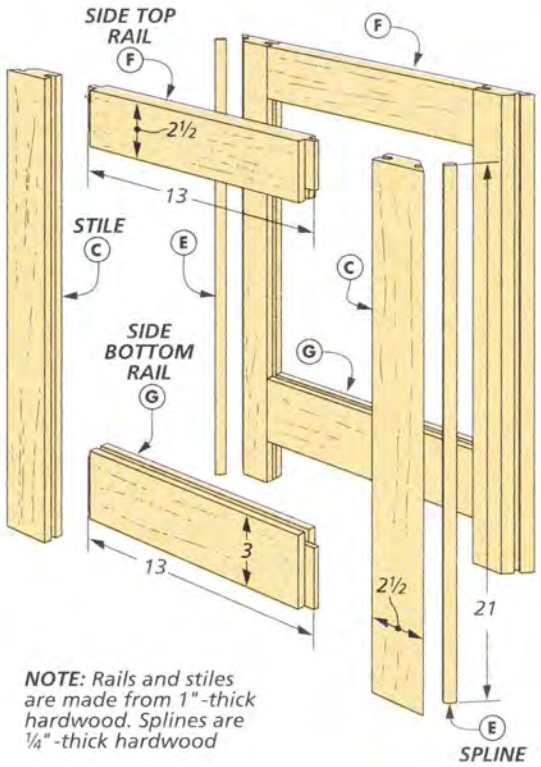


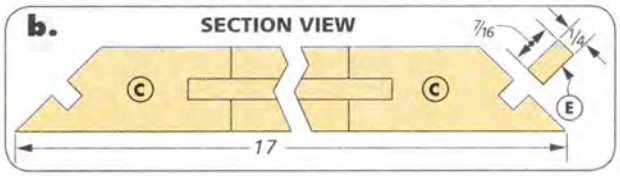


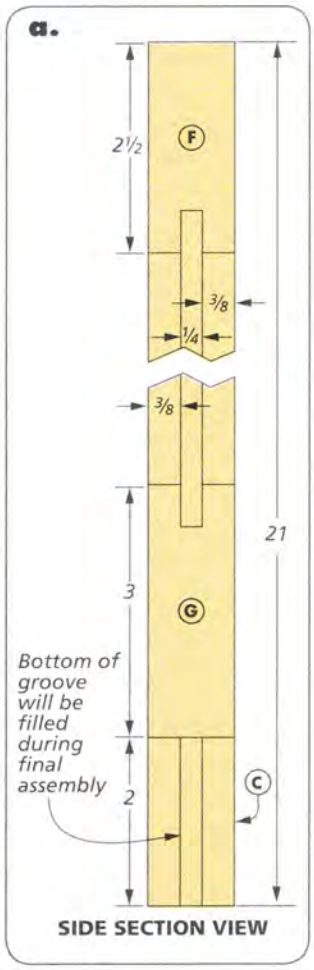


## SIDE FRAMES

The side frames connect to the front and back with the mitered stiles. They differ only in size. You can start by cutting the top and bottom rails to final size (note the difference in widths). Then cut the grooves and tenons on each, as you did before. You'll use the mitered stiles and the splines you made earlier to complete the side frames.

**DRY FIT.** Dry fitting reveals any problem areas with the fit of the components. I checked all the frame assemblies to make sure that each piece fit and that they were square. Afterwards, you can move on to making the panels.

## How-To: CUT THE MITERS & SPLINES

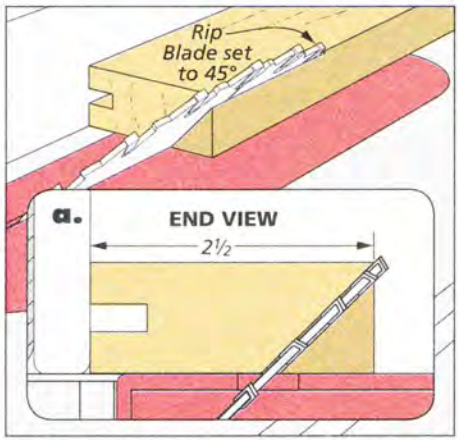


**Miter Cut**. Tilt the rip blade to 45° and set the fence as shown in detail 'a.' Then miter the edge of each stile.

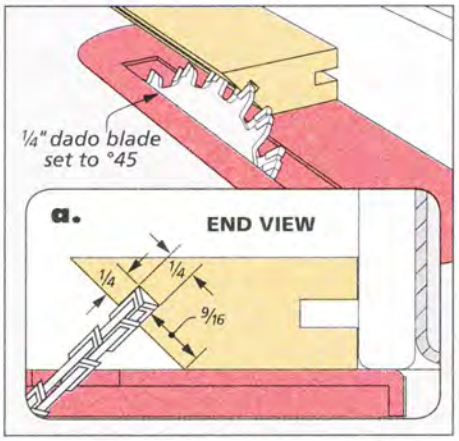


**Groove**. Install a ¼" dado blade tilted to 45° and to cut the groove for the spline in the mitered edge of each stile.

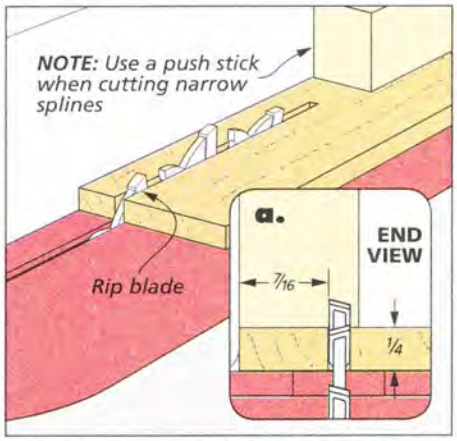


**Splines**. You'll need to start by planing some stock down to ¼" thick, then rip the four splines to width.

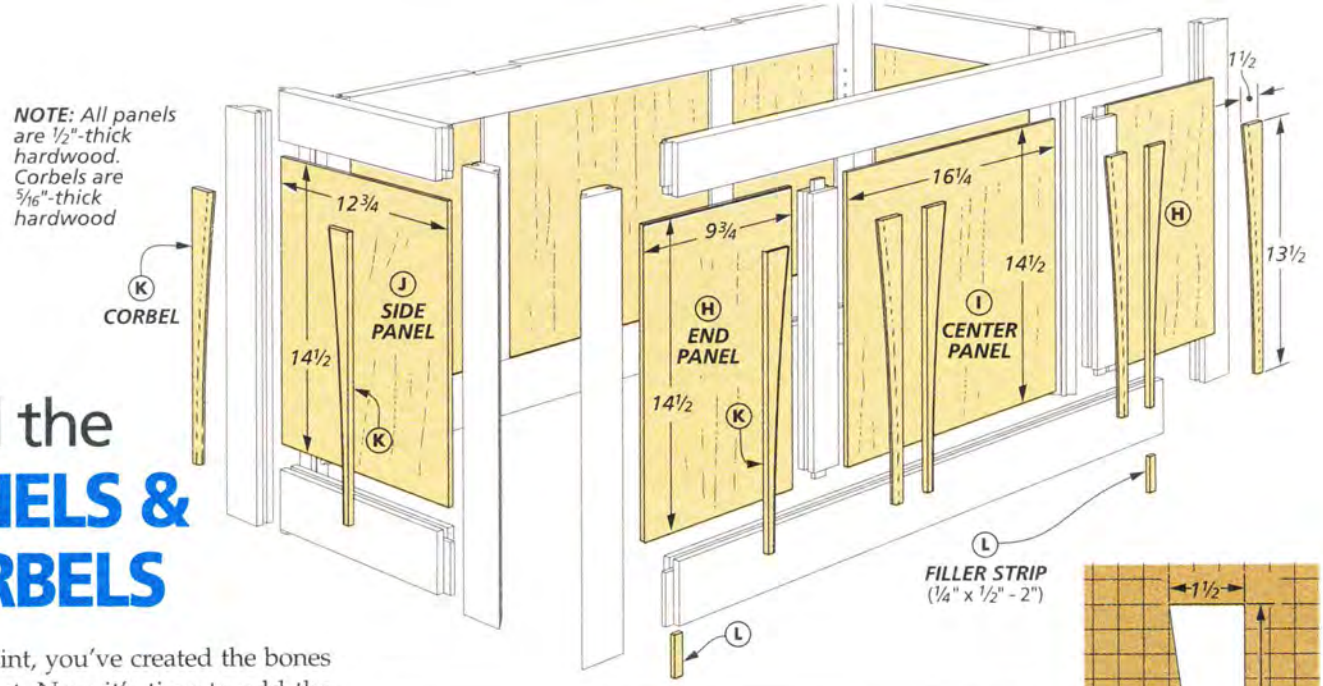


# Add the PANELS & CORBELS

At this point, you've created the bones of the chest. Now it's time to add the hardwood panels to complete the body. Each panel also receives a pair of decorative corbels. You'll finish up by making a frame and panel bottom for the chest and assembling the components.

**HARDWOOD PANELS.** You'll need to resaw and plane some stock for the panels down to the necessary thickness (½"). Then glue up the panels and cut them to final size. With a dado blade buried in an auxiliary fence, rabbet the edges and ends of the panels (left drawing, below).

After dry fitting, stain and finish the panels. This ensures that no unfinished edges will peek out when humidity causes the panels to contract.

**CORBELS.** Corbels glued to the stiles and dividers add to the Craftsman-style look. Once again, you'll have to plane some stock to final thickness (5/16"). I made a hardboard template to lay out the shape of the corbels. Later, you'll use the template to trim them flush after band sawing. Use the pattern at right to lay out the shape.

I also made a ¼" hardboard spacer to fit into the grooves in the frame for installing the corbels. Make the spacer a little wider to use during assembly to glue the corbels in place as shown in the center drawing below. A good coat of wax on the spacer helps prevent glue from sticking to the corbels during assembly.

**ASSEMBLY.** The nice thing about frame and panel construction is that it's easy to assemble and

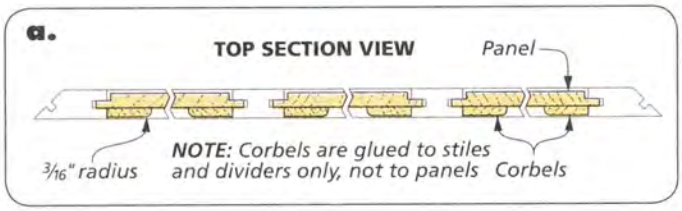


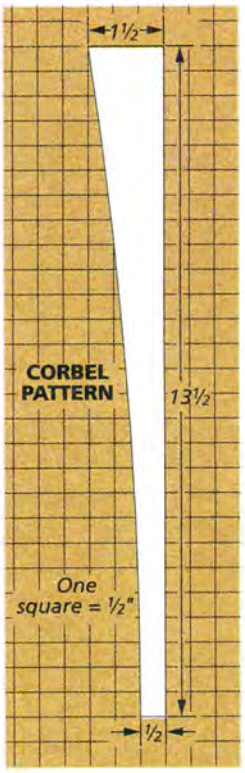


## How-To: FRAME PARTS

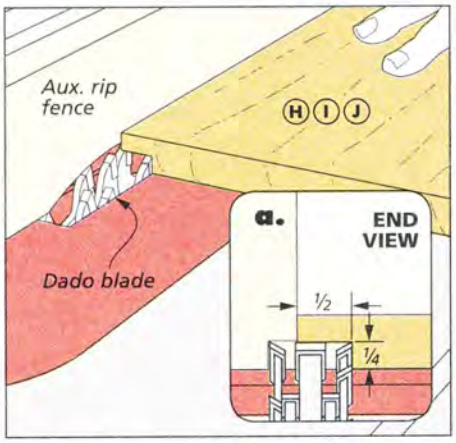


**Cutting Tongues**. With the table saw set up for cutting rabbets, cut the tongues for a snug fit in the grooves.

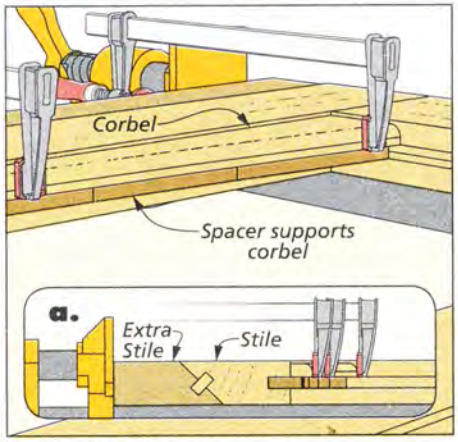


**Install the Corbels**. A hardboard spacer in the groove in the frame supports the corbel as you glue it in place.

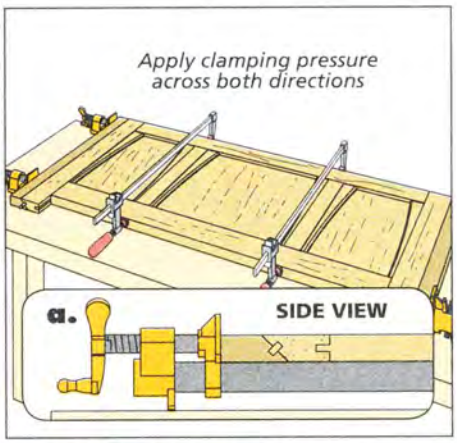


**Assembly**. The extra stiles you made earlier now make the perfect cauls as you glue up the frame and panels.

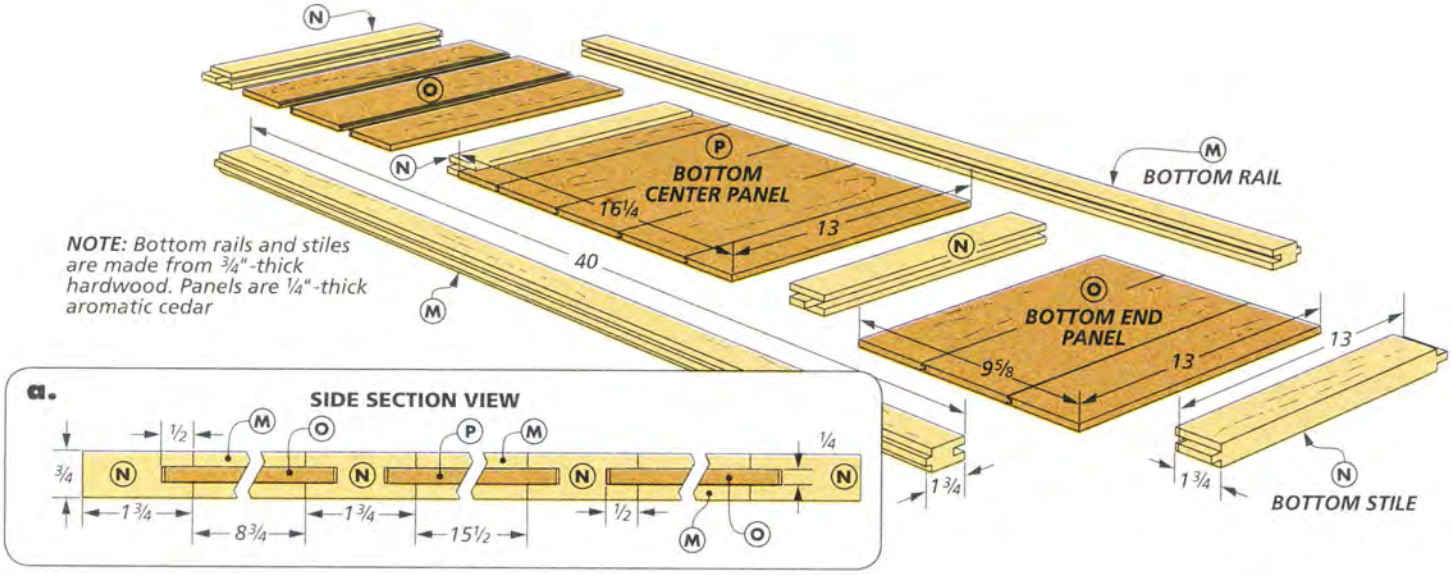


is virtually self-squaring. Just apply a little glue to the tenons on the rails and dividers and add the clamps. Let the panels float freely without glue in the frames. Use the extra stiles you made earlier as cauls (right drawing at the bottom of the opposite page).

**FILLER STRIPS.** At this point, the grooves in the stiles are visible at the bottom, below the bottom rails. To fill the voids, I cut some filler strips, sized for a snug fit. A little glue is all you need to install them.

**GROOVE.** After the glue dries on the assemblies, take the front and back to the table saw. You'll need to install a dado blade and then cut a groove on the lower edge of both assemblies to hold the bottom (Figure 1).

**BOTTOM.** The process of making the bottom is captured in the drawings at right. In Figures 2 and 3 you can see that cutting the centered groove and tenon are just the same as you've been doing for the other assemblies. The first difference is shown in Figure 4, where I cut a tongue on the outside edge of the rails.

The only other change is that I chose ¼"-thick tongue and groove aromatic cedar paneling for the bottom. Aromatic cedar is a traditional wood for this type of chest as it repels insects.

## ASSEMBLE THE CASE

Now is the time to dry fit the assembly to make sure the bottom fits and the corner joints are tight. I glued the bottom into the groove on the front first, and then added the sides and back.

With glue in the grooves on the stiles, add the splines and use a band clamp to bring it all together. Double check for square and let it dry overnight.

## How-To: BUILD THE BOTTOM

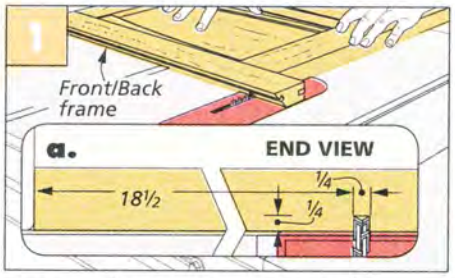


**Groove for Bottom.** Install a ¼" dado blade and cut a groove in the bottom rails and stiles for the bottom.

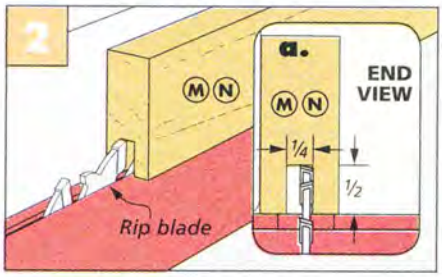


**Centered Groove.** Cut the centered groove for the cedar panels in the rails and stiles in two passes.

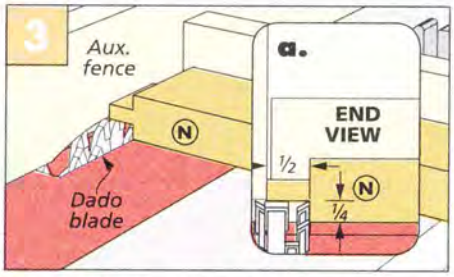


**Tenon.** You can cut another set of stub tenons using the dado blade buried in an auxiliary fence.

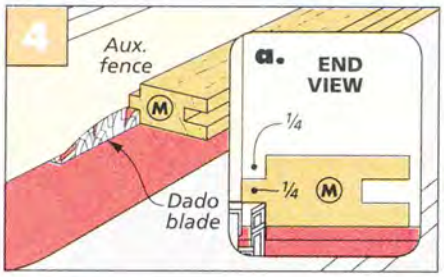


**Tongue.** The outside edge of the rails needs a tongue to fit into a groove in the front and back of the chest.

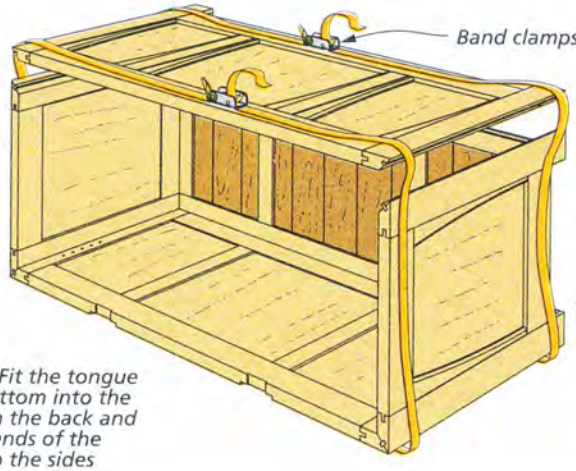


*FIRST: Glue the mitered sides in place using the splines to keep them aligned*

*SECOND: Fit the tongue on the bottom into the groove on the back and glue the ends of the bottom to the sides*

*THIRD: Now fit the front in place over the tongue on the bottom. Use the splines in the corners and tighten the band clamp*

# A sturdy **LID**

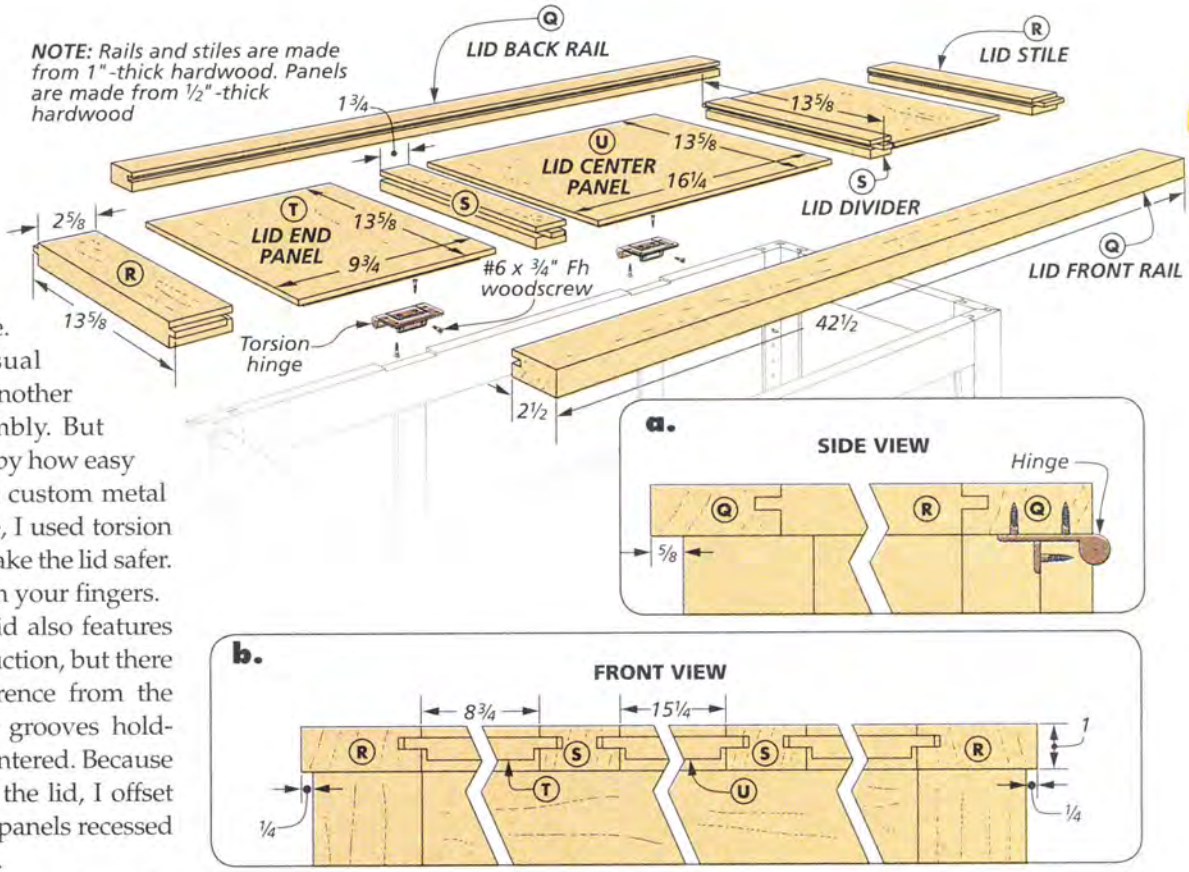


At this point, the chest just needs a lid and some hardware to complete the main case. There's nothing unusual about the lid. It's just another frame and panel assembly. But you might be surprised by how easy it is to create your own custom metal hardware. One last note, I used torsion hinges on the chest to make the lid safer. They won't let it drop on your fingers.

**LID.** It's true that the lid also features frame and panel construction, but there is one significant difference from the previous pieces — the grooves holding the panels are not centered. Because there are no corbels on the lid, I offset the grooves to keep the panels recessed ¼" evenly on both sides.

**RAILS & STILES.** After cutting the rails, stiles, and dividers to final size, you're ready to cut the joinery. The box below shows how to cut an offset stub tenon and groove joint that fits perfectly. It starts with the groove for the panels. The left drawing illustrates cutting the offset groove with a dado blade.

In the center drawing, you can see an easy technique for cutting matching offset tenons. The key is to set the dado blade just a hair below the groove you cut earlier. Then flip the workpiece over and change the blade height to match the groove on this side. This way, you're within one or two strokes with a hand plane of a perfect fit.

**PANELS.** Once again, you'll need to plane some of your stock to ½". Glue up the panels from narrower stock, and then cut the panels to final size. After that, rabbet the edges to fit into the grooves in the rails and stiles, as shown in the right drawing below. To prevent problems down the road, I stained and finished these panels just as I did the others before.

**ASSEMBLY.** Now you're ready to assemble and install the lid. But first, stain and finish the entire chest. Then attach the lid to the chest with the torsion hinges.

## How-To: TOP JOINERY

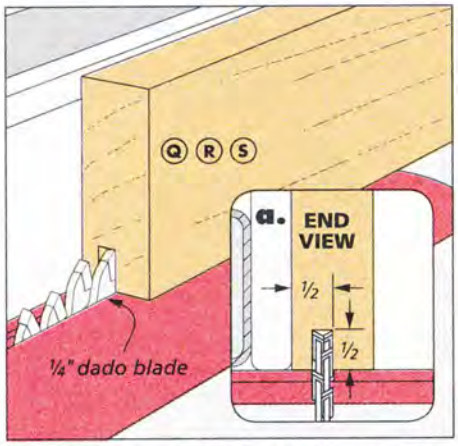


**Offset Groove**. Set the rip fence to the dimensions shown and cut the offset groove in all the frame pieces.

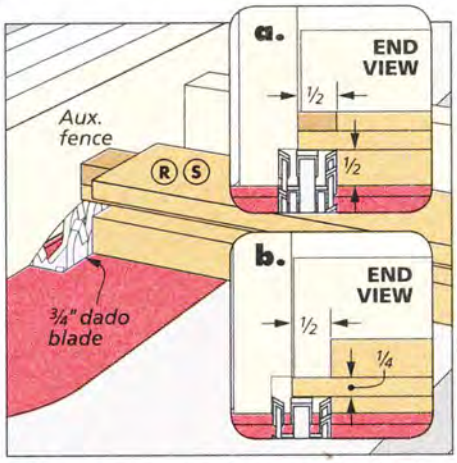


**Offset Tenon**. Use the groove in the stiles to set the blade height for cutting both sides of the tenon.

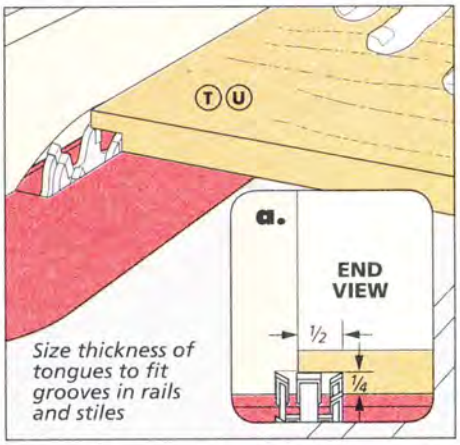


**Panel Rabbet**. After cutting the panels to final size, bury the dado blade in an auxiliary fence and rabbet all four edges.

# Shop-made **METAL BRACES**

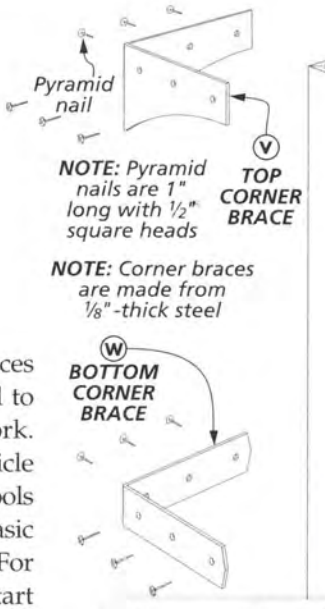


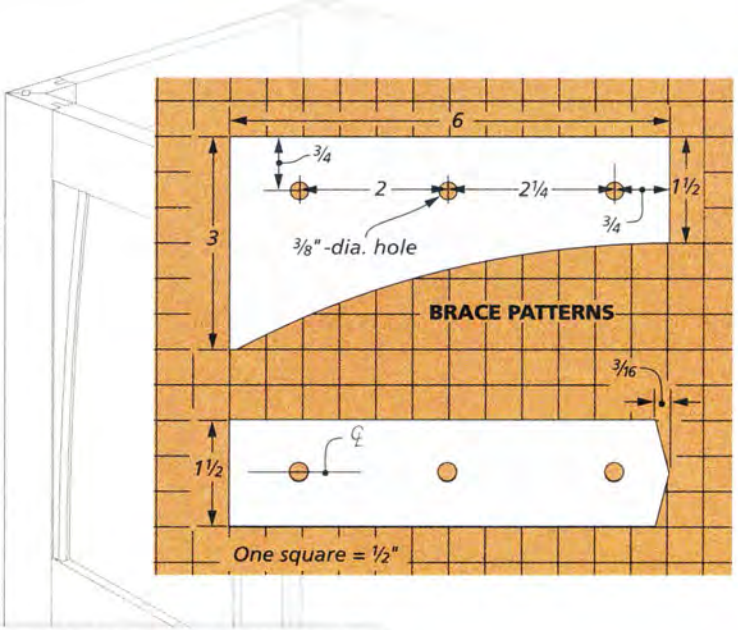


I chose to make my own corner braces from 1/8" sheet steel. There's no need to be intimidated by a little metal work. Before you start, take a look at the article on page 8. It gives you an idea of the tools you'll want to have on hand for the basic tasks involved in making the braces. For both the upper and lower braces, start by cutting the steel to final length (12").

**TOP BRACES.** The step-by-step photos at right guide your journey. It starts by marking the shape of the brace and the nail hole locations (see the patterns at right). I like to use layout fluid for work on metal pieces. It helps avoid any confusion between a layout mark and a scratch on the surface of the metal.

**DRILL.** With everything marked, start by drilling out the nail holes at the drill press, as shown in Step 1. Use a low-speed setting and a few drops of oil on the workpiece to lubricate the bit.

**CUT TO SHAPE.** You can cut this mild steel to shape using a steel-cutting blade in a jig saw. By mounting the steel to a piece of wood, you support the edges and help the blade cut cleanly (Step 2).

**SCORE.** There's one challenge with making steel corners — bending them to 90°. Step 3 shows how I scored the centerline on the inside face using an abrasive disk in a circular saw. This guarantees a good corner bend.

**BEND.** After scoring the line, all you need to do is clamp the brace down and bend it to 90° (Step 4).

**CLEANUP.** I used my random-orbit sander, followed by some hand sanding to clean up the metal surfaces (Step 5). This also prepares the metal for the patina solution you'll use later.

**PATINA.** Step 6 gives you an idea of how the spray-on patina works. You'll find more information about using it in Shop Notebook on page 31.

Test fit each brace and mark the location to drill pilot holes for the nails. Since the nails are a bit irregular, you'll need to take care to locate the heads properly so they're centered over the holes.

## **How-To:** MAKE THE BRACES

**Drilling.** After marking the shape and hole locations, drill the holes. I used a backer board to support the metal.

**Arc Cut**. With a metal-cutting blade in the jig saw, use a plywood backer to help cut through the mild steel.

**Score Centerline**. I used an inexpensive abrasive blade in the circular saw to just over halfway through the brace.

**Bending.** The scored line makes it easy to bend the steel. Use a square to guide you for a perfect fit on the corner.

**Sand**. Sanding removes all the marking fluid and fingerprints from the surface of the metal in preparation for the patina.

**Patina**. A spray-on patina is all it takes to for an aged look. For more on the two-step process, refer to page 31,

# Making the TRAY

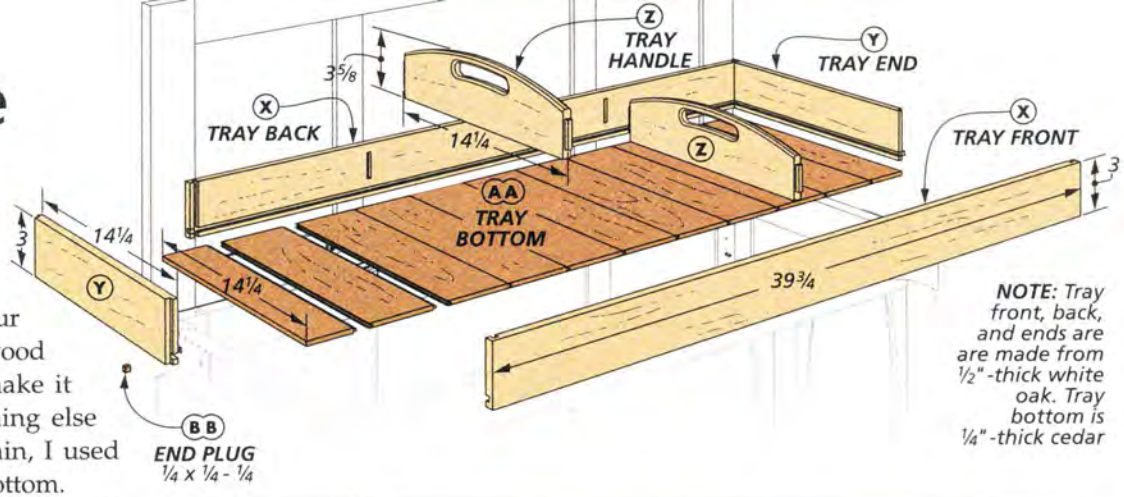


The original Stickley bride's chest had a handy pull-out tray that sat atop four wood stops. I replaced the wood stops with shelf pins to make it adjustable but left everything else largely the same. Here again, I used aromatic cedar as the tray bottom.

**FRONT & BACK.** The tray requires sturdy joinery to accommodate frequent lifting and replacing. So I decided to go with a joint that's both easy to make and very strong — tongue and dado. It's my favorite joint for drawers, having stood the test of time on several other projects. And since this tray is similar to a drawer, I think this joint is perfect for it. In addition, you'll notice that the tray front, back, and ends hold a groove for the bottom. The front and back also have mortises for the handles.

The drawings below serve as a guide as you set about making the individual pieces for the tray. Figure 1 shows how I used an auxiliary fence on the miter gauge to back up the dado cut and prevent tearout and splintering as the blade exited the workpiece. After that, you can cut the groove at the bottom of the front, back, and ends to hold the cedar bottom panel (Figure 2).

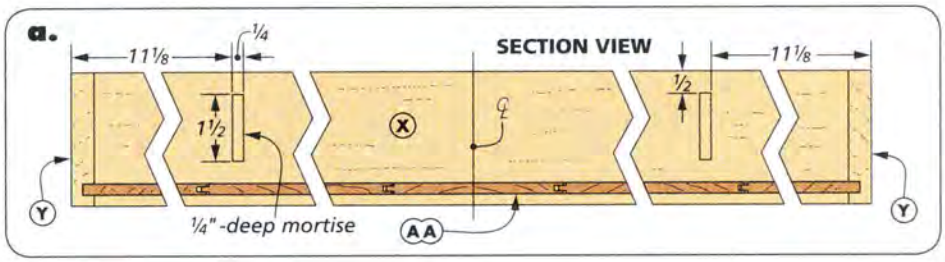


**ENDS.** Use the miter gauge to cut the tongues on the ends as in Figure 3. Check for a snug fit in the dadoes.

**MORTISES.** Now you'll need to lay out the mortises in the front and back for the handles. After that, get out your plunge router and clamp on a straightedge

## How-To: MAKE THE TRAY COMPONENTS

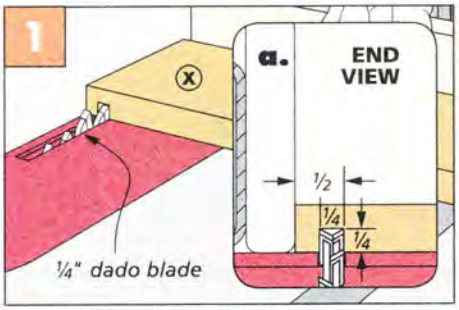


**Dadoes.** I installed an auxiliary fence on the miter gauge to cut the dadoes in the tray front and back.

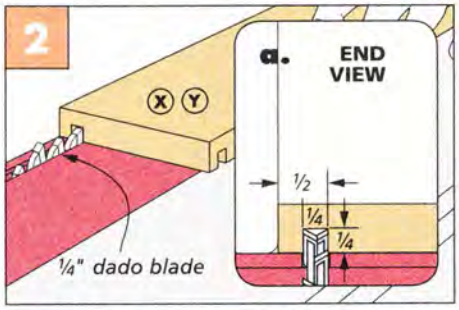


**Groove for Bottom**. Cut the groove for the bottom in the front, back, and ends using a dado blade.

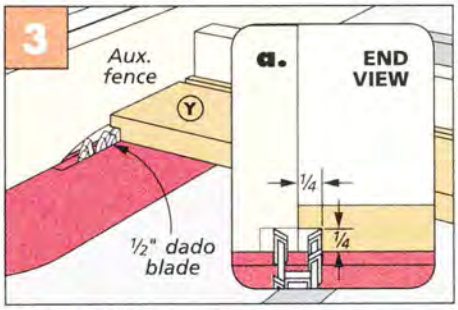


**Rabbet**. With the dado blade buried in an auxiliary rip fence, you can cut the rabbets on the ends to form the tongues.

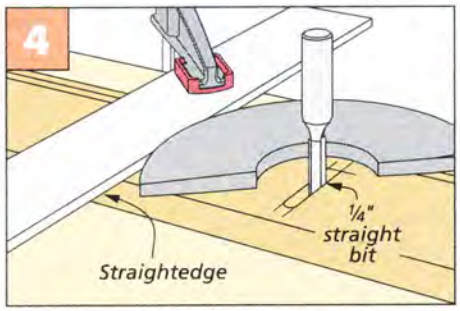


**Rout Handle Mortise.** I clamped a straightedge to the workpiece and routed out the dadoes for the handles.

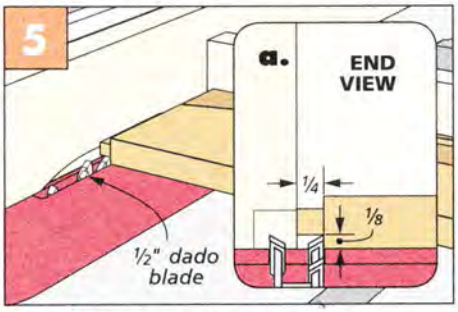


**Handle Tenon**. Cut the tenons on the ends of the handles using the dado blade buried in the auxiliary fence.

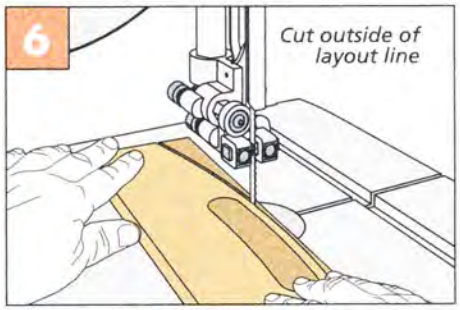


**Band Saw Arc**. After laying out the curve, cut the shape at the band saw, making sure to stay on the waste side of the cut.

to rout the mortises. (Figure 4). I just marked the top and bottom edges of the mortises. Then I routed to the line and squared the ends with a chisel.

**HANDLES.** I cut the two handles to final size and formed the tenons on the ends before cutting them to shape. This makes it easier to cut the tenons (Figure 5).

After completing the tenons, lay out the curve on the handle using the dimensions shown in the lower drawing at right. At the band saw, cut the gentle curve, staying on the waste side of the line (Figure 6, opposite page).

Now drill the two holes shown in Figure 1. The drawing below it shows the location. I used a jig saw to remove the waste in between the two holes to form the hand hold (Figure 2). A little hand sanding is all it takes to smooth the cutout. At the router table, rout the 1/8" roundover on the top edges and hand hold of the handle to make for a much more comfortable grip.

**BOTTOM.** Glue up the 1/4"-thick cedar panel and cut it to final size. Dry fit the tray bottom by installing the two ends and the front and back. Then finish the tray parts before installing the cedar. After that, move on to final assembly.

**PLUGS.** Finally, I installed four small plugs to fill the holes left by the grooves in the front and back. After applying the final stain and finish, the chest is ready to go (leave the cedar unfinished).

This is one of those projects that is likely to be made as a gift. The lucky recipient is sure to treasure it for life.

## How-To: FORM THE HAND HOLD

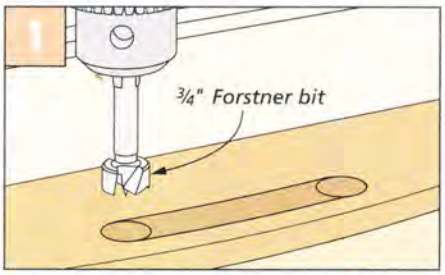


**Drill.** Drill the two starter holes at the ends of the hand hold. A piece of scrap underneath prevents tearout.

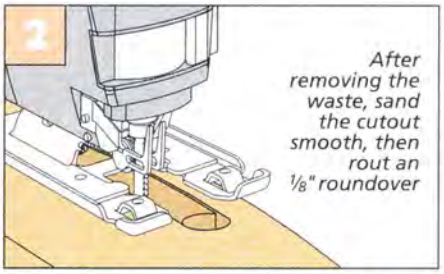


**Jig Saw.** Now you can remove the rest of the waste by cutting the arcs between the holes with a jig saw.

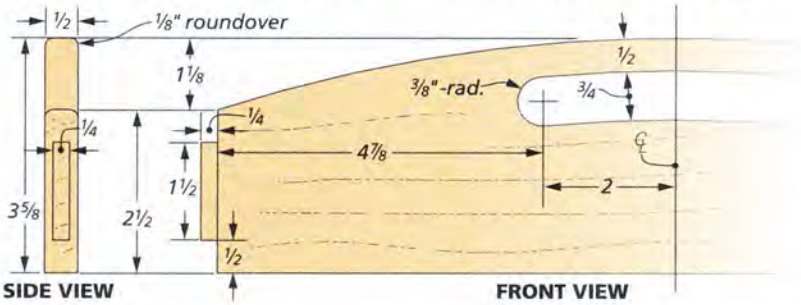


## Materials, Supplies & Cutting Diagram

| | | |
|---|---|---|
| **A** | Front/Back Top Rails (2) | 1 x 2 1/2 - 38 |
| **B** | Front/Back Bottom Rails (2) | 1 x 3 - 38 |
| **C** | Stiles (8) | 1 x 2 1/2 - 21 |
| **D** | Dividers (4) | 1 x 1 3/4 - 14 1/2 |
| **E** | Splines (4) | 1/4 x 7/16 - 21 |
| **F** | Side Top Rails (2) | 1 x 2 1/2 - 13 |
| **G** | Side Bottom Rails (2) | 1 x 3 - 13 |
| **H** | End Panels (4) | 1/2 x 9 3/4 - 14 1/2 |
| **I** | Center Panels (2) | 1/2 x 16 1/4 - 14 1/2 |
| **J** | Side Panels (2) | 1/2 x 12 3/4 - 14 1/2 |
| **K** | Corbels (16) | 5/16 x 1 1/2 - 13 1/2 |
| **L** | Filler Strips (8) | 1/4 x 1/2 - 2 |
| **M** | Bottom Rails (2) | 3/4 x 1 3/4 - 40 |
| **N** | Bottom Stiles (4) | 3/4 x 1 3/4 - 13 |
| **O** | Bottom End Panels (2) | 1/4 x 9 5/8 - 13 |
| **P** | Bottom Center Panel (1) | 1/4 x 16 1/4 - 13 |
| **Q** | Lid Front/Back Rails (2) | 1 x 2 1/2 - 42 1/2 |
| **R** | Lid Stiles (2) | 1 x 2 3/4 - 13 5/8 |
| **S** | Lid Dividers (2) | 1 x 1 3/4 - 13 5/8 |
| **T** | Lid End Panels (2) | 1/2 x 9 3/4 - 13 5/8 |
| **U** | Lid Center Panel (1) | 1/2 x 16 1/4 - 13 5/8 |
| **V** | Top Corner Braces (4) | 1/8 steel 3 x 12 |
| **W** | Bot. Corner Braces (4) | 1/8 steel - 1 1/2 x 12 |
| **X** | Tray Front/Back (2) | 1/2 x 3 - 39 3/4 |
| **Y** | Tray Ends (2) | 1/2 x 3 - 14 1/4 |
| **Z** | Tray Handles (2) | 1/2 x 3 5/8 - 14 1/4 |
| **AA** | Tray Bottom (1) | 1/4 x 14 1/4 - 39 1/8 |
| **BB** | End Plugs (4) | 1/4 x 1/4 - 1/4 |

- (48) 1/2" x 1" Pyramid Head Nails
- (2) 60 Inch/Pound Torsion Hinges
- (4) 1/4" Shelf Supports
- (8 oz.) Japan Brown Patina
- (8 oz.) Metal Oil Finish

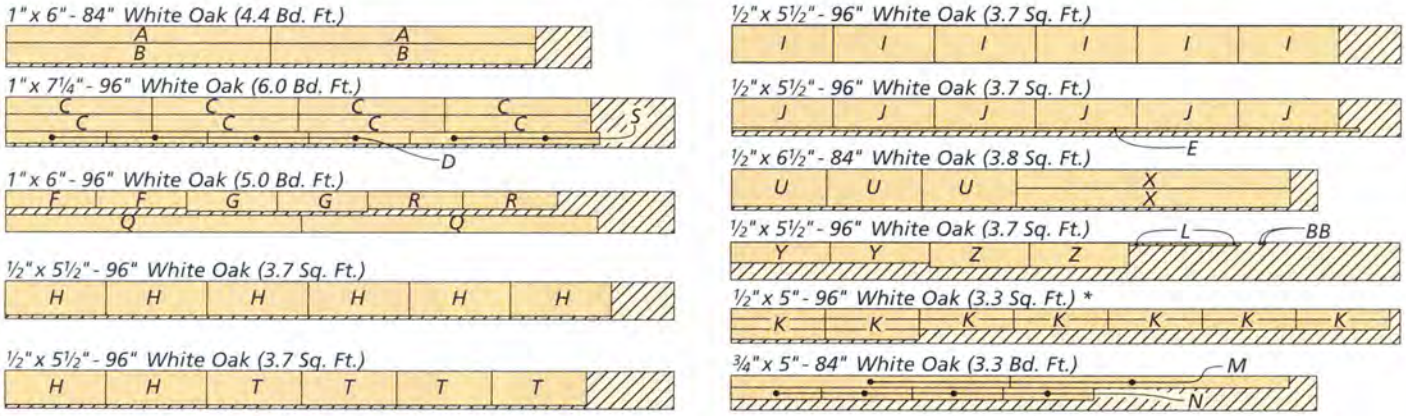


***ALSO NEEDED:*** *One (1) 15 sq. ft. box, Cedar Plank Paneling (O, P & AA)*
** Part K is planed to a final thickness of 5/16"*

# multi-fluted Router Bits

Most of us would prefer to do as little sanding as possible on woodworking projects, especially on intricate edge profiles created with a router. Unfortunately, many conventional two-cutter router bits fall short of the sanding-free perfection desired.

▼ The additional cutting edges on these router bits allow for more aggressive cuts with cleaner results.

Unless you're vigilant about controlling the feed rate and depth of cut (not to mention keeping router bits clean and sharp), burn marks, tearout, and ridges are often the unwanted result. This is particularly true when working with hardwoods that are difficult to rout, like cherry and oak. When faced with these situations, a router bit with more than two cutters can certainly earn its keep.

**ADVANTAGES.** There are several advantages to using multi-fluted router bits. First, they allow you to make deeper, more aggressive cuts, yet still achieve cleaner results than a two-cutter bit. They also make incredibly smooth, tearout-free cuts on end grain. That's something that's difficult to achieve with any consistency using a two-cutter bit. And finally, with the cutting burden spread to more cutting edges, the manufacturers' claim of a longer cutting life seems valid.

**MULTI-FLUTED BITS.** *TripleWing* router bits from *MLCS* and *Freud's Quadra-Cut* line are the multi-fluted bits that I reach for the most in my shop (photo at left). While both styles of these router bits have multiple cutters, their designs are completely different.

**TRIPLEWING.** As their name implies, *TripleWing* bits have three cutting edges. All three of the cutting edges are the full size of the profile. The illustration at the top of the opposite page shows exactly what I mean.

The *TripleWing* lineup from *MLCS* offers many standard router bit profiles. From cove bits to rabbeting bits, the *TripleWing* bits have most of the basic profiles covered. You can see several of these bits in the top middle photo on the facing page. There are also several raised panel router bits available with three cutting edges (more on those later). *TripleWing* bits make incredibly clean cuts in one pass but should be run at a speed to match the bit diameter, the same as a two-cutter bit.

**QUADRA-CUT.** Another of my favorite router bit styles are *Quadra-Cut* bits. As I'm sure you've guessed, the *Quadra-Cuts* have four cutting edges. However, the design of these bits is entirely different than the *TripleWing* bits.

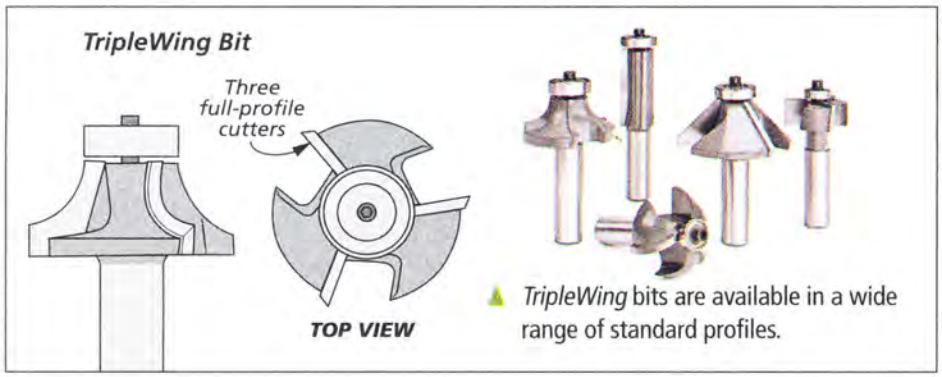


▲ *TripleWing* bits are available in a wide range of standard profiles.

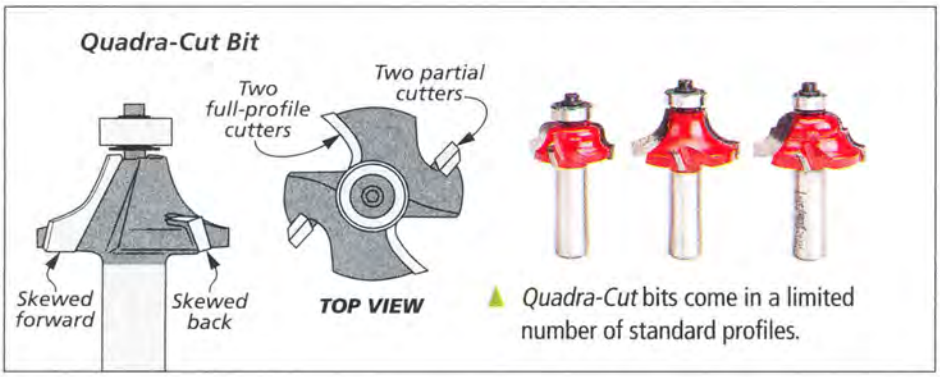


▲ *Quadra-Cut* bits come in a limited number of standard profiles.

▲ Using a router bit with additional flutes creates incredibly smooth profiles on difficult-to-rout end grain.

The *Quadra-Cut* bits have two full-size cutters angled forward that slice downward during the cut. The other two cutters are shorter and skewed back (illustration above). These shorter cutters only cut along the top edge of the profile.

With the two sets of cutters working in tandem, one set cutting downward and one set cutting upward, they reduce the tearout issues associated with some bits. And the surface left behind generally requires only minimal sanding.

The *Freud Quadra-Cut* bits are also available in several different profiles. However, this lineup of bits leans heavily toward classic profiles, like Roman ogees and cove and bead bits, as shown in the inset photo above.

**ROUTING TEST.** Where the carbide meets the wood is the real test. Comparing the *TripleWing* and *Quadra-Cut* router bits to a standard two-cutter bit reveals little when routing long grain. However, you see the true benefits of these bits when routing end grain. The photos at the upper right show that multi-fluted cutters leave much cleaner and smoother surfaces compared to a two-cutter bit.

As evidenced by the photo, the cut made with the *Quadra-Cut* bit completely eliminates the tearout at the top of the fillet. And burn marks are virtually nonexistent using either of these multi-fluted router bits.

While the multi-fluted bits do come at a premium price over conventional bits, they're not that much more expensive. And they certainly warrant keeping a few of your most often used profiles on hand. After all, when the trade-off is reduced sanding work at the end of a project, that's all the incentive you need.

## MULTI-FLUTED RAISED-PANEL BITS

Making raised panels at the router table is certainly not a new concept by any stretch. Multi-fluted raised panel bits simply take this time-tested idea and make it even better.

The *Quadra-Cut* and *TripleWing* lines both have several raised panel router bit profiles in their arsenals. They're available as a standard bit (near photo), or with an undercutter (far right photo) that allows you to mill the front and back of the panel at the same time.

A variable speed router is a must to run these bits at a slower RPM.

▲ These multi-fluted raised-panel router bits are ideal for making cabinet doors. Choosing a bit with an undercutter (at right) allows you to produce panels that are flush with the door frame on the back side.

# edge jointing with a Hand Plane

It's no secret that a good glue joint requires the mating surfaces to be straight, flat, and square to the face. And while I love my rock-solid power jointer with the long bed to handle long workpieces, in truth it only does part of the job. Don't believe me? Take a look at the photo at right and note the scalloped edge of the workpiece, fresh off the jointer.

There's nothing wrong with my jointer. It's perfectly tuned up. But this is the nature of this particular tool. You can minimize the ridges by slowing down the feed rate on your final pass, but you can never eliminate them completely. For that, I turn to a hand plane — specifically, a jointer plane.

**JOINTER PLANES.** Jointer plane designs from different manufacturers can vary significantly, but they all have one thing in common — their length. Typical jointers run between 22" and 24" long (photos at left). This gives them the ability to flatten a surface or edge in spite of dips and ridges in the workpiece. A block or smoothing plane will follow the terrain and smooth the surface but not flatten it.

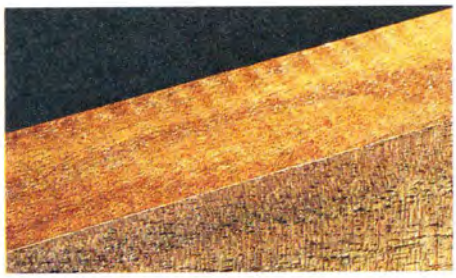

After jointing the edge of a workpiece on a power jointer, a close look reveals the ridges left by the spinning knives.

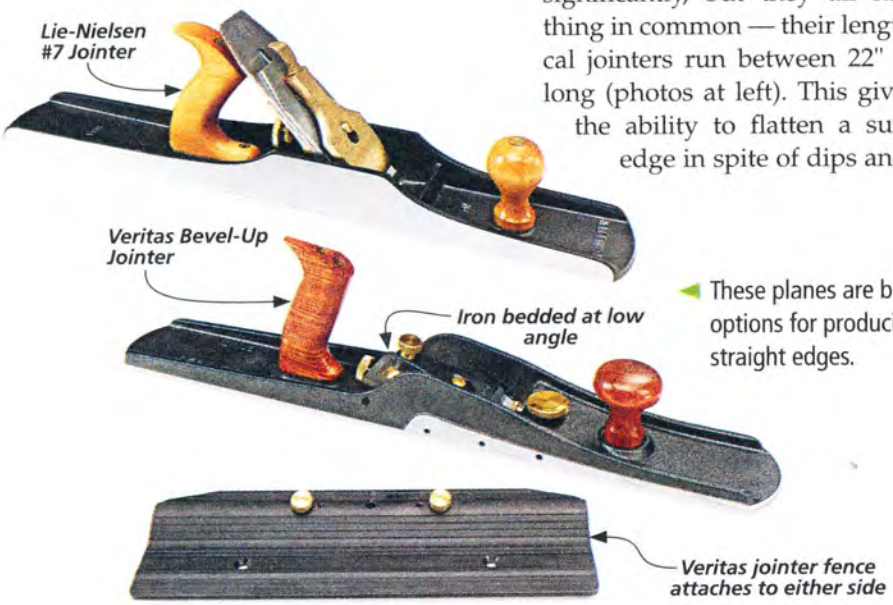


These planes are both great options for producing flat, straight edges.

You'll also notice how wide the blade (iron) of the plane is. That comes in handy when you want to joint two mating workpieces at one time, a good technique for achieving a tight joint (more on this technique later). No matter what style of jointer plane you choose, however, there are a few things you need to know before you start planing.

**HOLDING THE WORKPIECE.** The importance of securing the workpiece to be jointed can not be overstated. Any rocking or movement of the workpiece can make planing difficult. A good vise with the

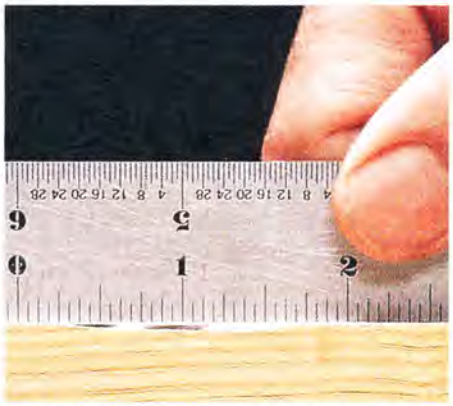

▲ Use a long, metal straightedge initially to check for high/low spots. Continue to check your work periodically as you go.

▲ Attaching a fence to a jointer plane makes it much easier to maintain a square (perpendicular) edge.

▲ By jointing two mating pieces at the same time, you're virtually guaranteed a perfect glue joint.

inside face flush with the edge of the bench is what you want here. And if you have a long workpiece, a hand screw on the other end can be clamped to the bench for stability (main photo).

**THE WORKPIECE.** Before securing the workpiece, you need to make sure it's set up so you're planing in the direction of the grain. In other words, you have to determine the direction of the rising grain so you're cutting into it and not against it, which can result in tearout.

That's easy enough to talk about in theory, but the piece of cherry shown in the main photo is a good example of the reality of most woods. The grain is rising and falling in different parts of the same board. As you can see, I aligned the board to plane in the direction of the grain that was predominately rising. When you do this, just be sure to check the entire length in case you need to clean up a little tearout.

**CHECK THE EDGE.** With the workpiece secured, I like to check the edge to be jointed and mark the high spots. A long straightedge and a light behind it helps identify the areas that might need a little more attention (left photo above).

**STANCE & GRIP.** Generally speaking, I approach the task of jointing with a stance that places my left foot in front (I'm right-handed) and my right foot behind, providing stability and pressure to move forward. With my left hand, I place more pressure on the knob at the front edge of the plane than I do with my right hand on the handle (drawing below).

The key is to keep the bed of the plane square to the workpiece. A fence can help ensure this (middle photo above).

Begin your stroke with the blade just off the rear edge of the workpiece and move forward in a fluid, steady motion, walking forward as necessary. I like to lift the plane off the workpiece on the backstroke. The goal is a continuous shaving the full length of the workpiece.

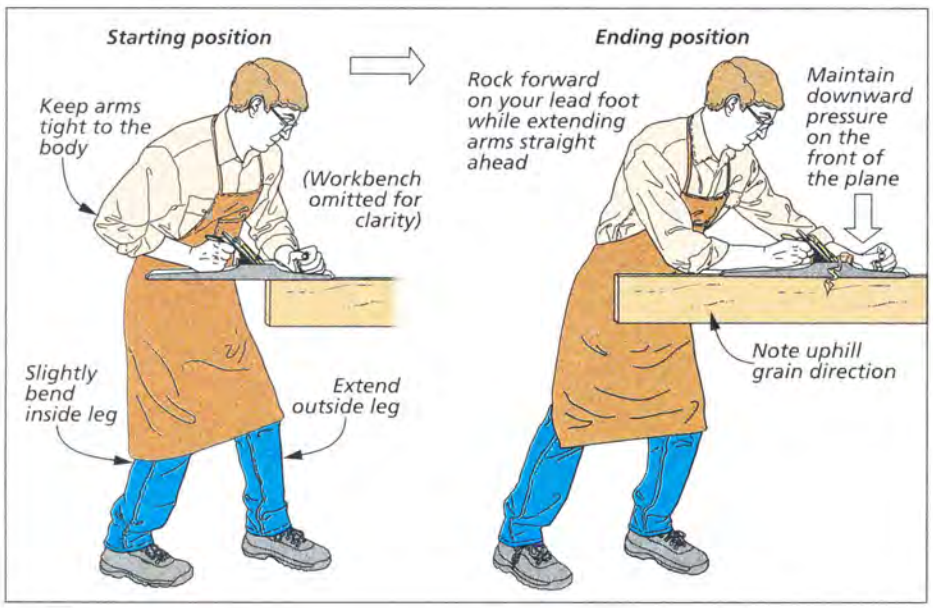


**PLANING.** In addition to the body position and posture, you'll want to keep the jointer plane straight on the workpiece. That is, don't skew the jointer in relation to the stock. If you do so, you negate the advantage of the plane's length by reducing the footprint of the plane on the edge of the workpiece.

**TECHNIQUES.** If you joint your stock as I've described so far, you'll get good results. But there are a few tried and true ideas that can allow you to proceed a bit more efficiently.

**DOUBLE UP.** A popular technique for gap-free panels is jointing two mating edges at one time, as in the right photo above. This is a traditional method for making tabletops or other large panel glueups. By marking the mating edges and planing them together, the two surfaces will be mirror images. Any minor variations, like a tilt of the plane during a pass, will cancel each other out. You can be assured that they'll fit together well when you take them out of the vise and join them together.

**DEPTH OF CUT.** You'll probably want to start with the blade set for a heavy cut to remove the bulk of the waste. Then finish with a final, shallow pass. It'll leave a glass-smooth edge.

**BOTTOM LINE.** I'm sure you've glued up several projects without jointing the edges this way. And I won't say that your joints will fail if you glue them up straight off the jointer, or the table saw for that matter. But by making this technique part of your routine, there will never be a doubt. W

# setting up & using your Router Table

▲ Today's router table systems come well equipped with everything you need to rout accurately and easily with almost any bit.

At some point in time, an innovative woodworker figured out that a router works pretty well when you mount it upside-down to a panel and bring the workpiece to it. History has forgotten exactly who did it first, but whoever it was, I'd like to thank him.

A few decades and several variations later, the router table is an essential tool for most woodworkers. In my shop, my router table is indispensible. In fact, my router gets a lot more use in the router table than out of it.

**ROUTER TABLE ESSENTIALS.** As those early "pioneers" of the router table proved, you don't need much to create a table-mounted router. The earliest models were likely a piece of plywood with a hole for the bit to pass through. The router base was attached to the underside of the panel with screws. Of course, times have changed, so there are a few more items that I now consider essential when looking for a good router table for the shop. An example of a solid overall setup is shown on the left. Granted, this is just one example of several available router table models on the market today.

**ROUTER TABLE TYPE.** The first thing to consider is what kind of router table you need — or have room for — in your shop. If you're tight on space, you might consider a smaller benchtop router table. These are designed to sit on top of a workbench in use and then

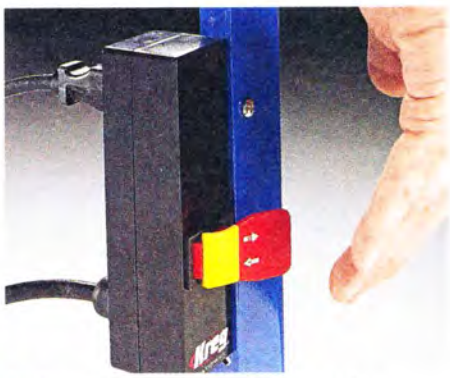

▲ An auxiliary power switch is a nice feature. It eliminates reaching under the table to switch the router on or off.

be put away when you're not routing. Another space-saving option is to replace the existing extension wing on a table saw with a router table.

If you have the space, a stand-alone table like the one featured here is the way to go. You'll want one with a solid, sturdy base that won't shift in use, and a large, flat worksurface for routing workpieces of all sizes accurately. Built-in, locking casters are also useful if you ever need to move the table around in your shop.

**OTHER FEATURES.** Beyond the basic router table itself, you'll want to look for a few other important features in your router table setup. One area that you'll really want to take a close look at is the insert plate.

The insert plate is nothing more than a rectangular plate to which you attach the router base. It fits in an opening in the router table and sits flush with the surface. The insert plate should be easy to remove to facilitate height adjustments and bit changes. This sure beats reaching underneath the table to change the height or the bit, which is inconvenient, not to mention uncomfortable. Of course, a router lift makes this process even easier and more efficient. You can read more on lifts in the box below.

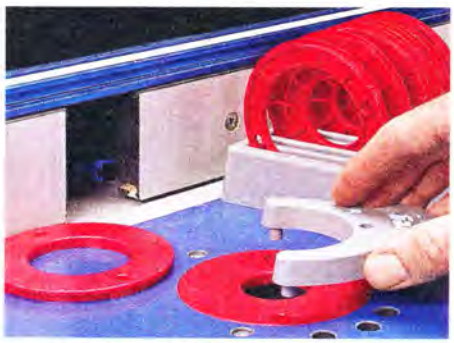

▲ Reducer rings for the insert plate allow you to match the diameter of the bit to the size of the opening in the ring.

Most insert plates sold today accept several different-sized reducer rings, as well (see the photo, below left). The idea is to choose a ring that closely matches the diameter of router bit you're using. Reducer rings are similar in concept to zero-clearance throat inserts for a table saw. They reduce the chance of chipout, and they enhance safety by eliminating the possibility of a workpiece tipping down into the opening surrounding the router bit.

**FENCE.** An adjustable fence is another critical feature of a router table, for a number of reasons. One, the fence increases accuracy by guiding the workpiece properly over the router bit. Two, it enhances safety by letting you add featherboards, bit guards, and other items on a built-in T-track.

Many fences also have a dust port right behind the opening for the router bit. This adds yet another useful feature, as dust collection is pretty critical when using the router table.

**ROUTER TABLE UPGRADES.** After working with a router table for a little while, you start to get a sense of just how nice the setup can be. And it's only natural to want to add a few more bells and whistles to your setup. One of my favorite upgrades to an ordinary router table is an auxiliary power switch (lower right photo on the opposite page). With this, I can switch my router on and off with a conveniently placed switch, rather than having to bend over and hunt for the router switch underneath the table.

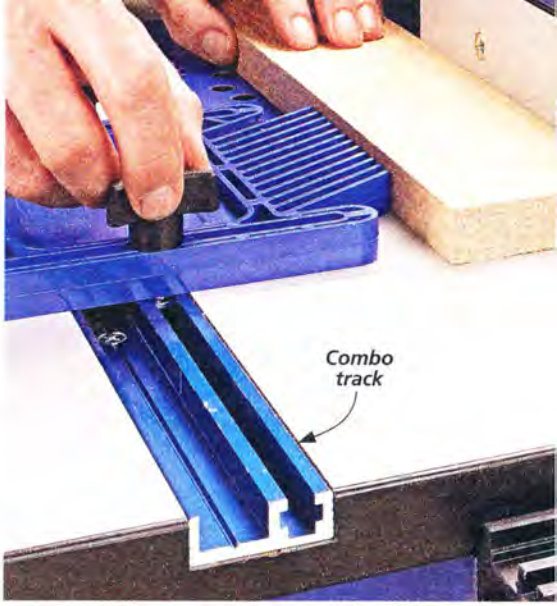


▲ Miter tracks are helpful for making end cuts and adding accessories. This *Kreg* table has a combination miter/T-track.

A built-in track on the tabletop is also pretty convenient (photo above). This allows you to rout the ends of pieces on the router table by adding a miter gauge. It also makes it easy to add side support like featherboards.

On the next page, I'll explain a little more about basic techniques you can use when you're getting started with your router table.

## ROUTER LIFTS

I wouldn't call a router lift an "essential" woodworking tool. But once you get accustomed to using one, you start to realize just how convenient an upgrade it really is.

In a nutshell, a router lift allows you to change the height of the bit easily. Without a lift, you have to get under the table or lift out the insert plate and adjust the router in its base. But with a lift, you just turn a handle. (This handle is usually located above the table, though the new *U-Turn* lift from *MLCS* positions it beside the table.) Many lifts also feature a scale that allows you to make precision height changes in small increments (1/32", 1/16", etc.)

The result is a lot less hassle and strain on your back when changing the height of a router bit. Plus, most lifts allow you to raise the bit high enough that you can change the bit from above the table, as well.

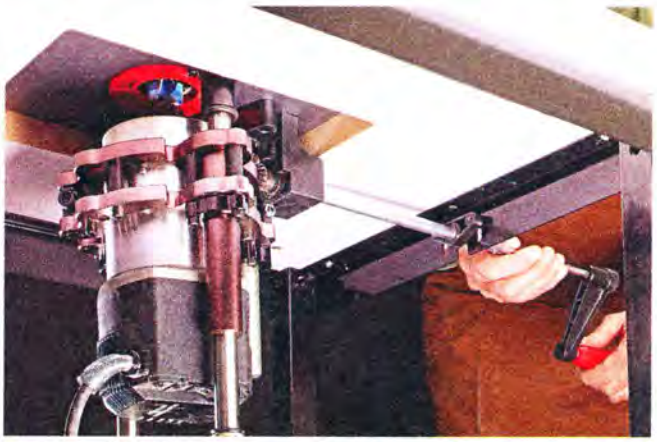

▲ Router lifts, like the *U-Turn* from *MLCS* that is shown here, make adjusting the height of the router bit above the table as simple as turning a handle.

## Simple Table Routing Strategies

With an understanding of the features you might want to look for in a router table, let's explore some basic techniques. Honestly, using a router in a table is often more accurate and safer than it is hand-held. But if you're not accustomed to it, it's a bit different than routing by hand.

**SETTING THE FENCE FOR EDGE ROUTING.** The bulk of my work at the router table is pretty basic. It often includes routing edge profiles such as roundovers, chamfers, and coves. The bits that make these profiles all have bearings, so you might think that would be sufficient for guiding the workpiece. But actually, it's a good idea to use both the bearing and the router table fence to give your piece even more support as you rout. To do this, all you have to do is set the bearing flush with the front face of the fence. I use the technique shown in the upper right photo.

**RIGHT TO LEFT.** When it comes time to actually rout, the rule for a router table is simple: rout from right to left (drawing, near right). This becomes second nature after awhile, but it seems tricky at first since it's opposite from the direction you use with a hand-held router.

**MULTIPLE PASSES.** Another thing to keep in mind at the router table is to make multiple passes when routing large or deep profiles (refer to the far right drawing). Of course, this same rule applies when routing hand-held, as well, but the urge to cheat and cut too much may be even greater on the router table. Be cautious when it comes to the depth of cut, and when in doubt, listen to your router. If it slows down or it sounds like it's laboring through the cut, then you're probably cutting too deeply.

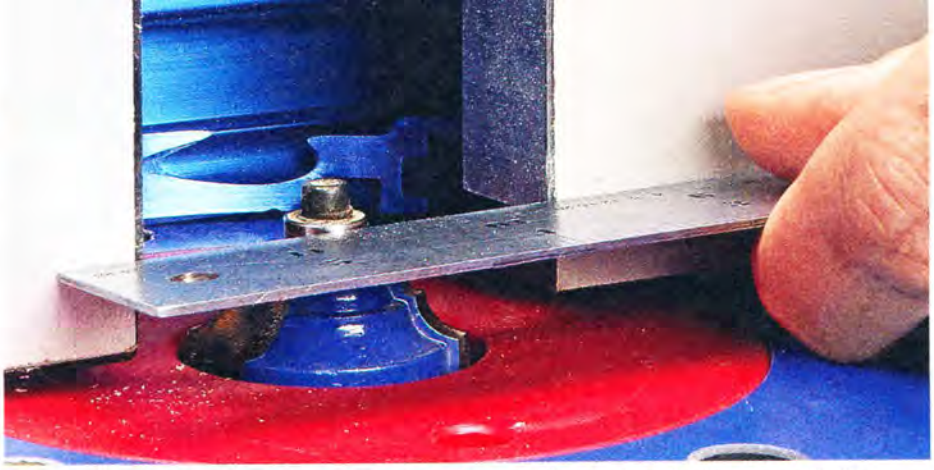

▲ Even if a router bit has a bearing to guide the cut, I like to align the bearing with the router table fence. This gives you a larger flush surface to keep the cut consistent across the entire edge of a workpiece. Just use a straightedge to align the bearing and fence.

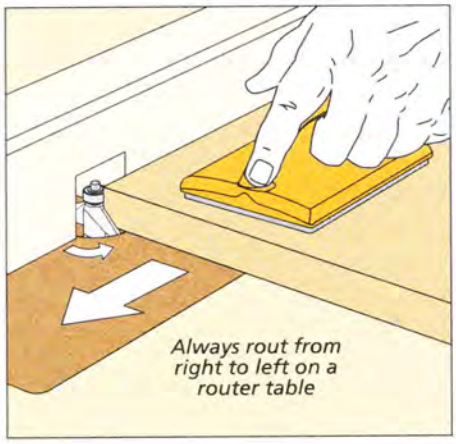


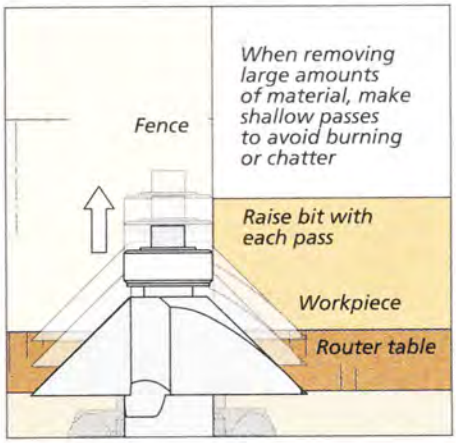


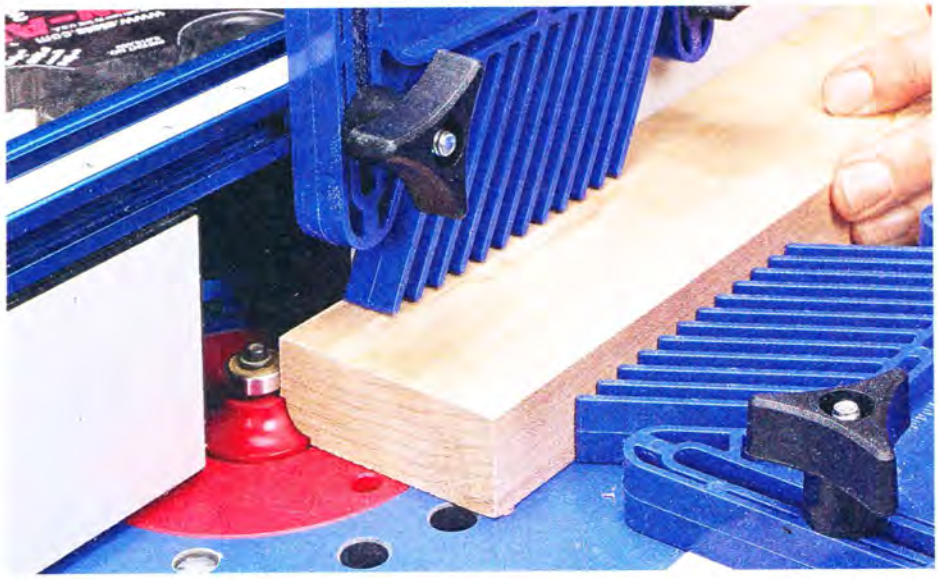

▲ Featherboards applied beside and above the workpiece are a good extra precaution to take at the router table. Workpieces have a tendency to lift while cutting, and the featherboards prevent this from occurring, ensuring a clean, accurate cut.

**SAFE & SECURE.** I wouldn't say that using featherboards is always necessary when making edge cuts on the router table. However, workpieces do have a tendency to creep upward as you rout them, so adding top and side support can help ensure an accurate cut. As a general rule, I tend to use featherboards if the piece is longer than 24". Shorter than that, and I will often bring my hands in closer to provide the downward and lateral pressure needed to keep the cut smooth and accurate.

**ROUTING ENDS.** Thus far, most of what I've discussed here has involved routing the edge of a workpiece, with the edge tracking along a bearing and a router table fence. But what if you have to rout the ends of boards with a profile or to create joinery?

A router table still excels in this arena, but you'll want to approach the cut a little differently. Here, I like to use a miter gauge in the router table's miter track for guiding the workpiece past the bit at a 90° angle.

Of course, router bits have a tendency to tear out a workpiece as they exit the wood, even more so than a

table saw blade. So for this reason, an auxiliary wood fence on your miter gauge is even more critical at the router table than it is at the table saw. Just align the edge of the auxiliary fence with the bearing on the router bit, and screw the fence in place before routing. As you can see in the photo on the right, it supports the back of the workpiece and prevents damage as the bit exits the wood.

If you don't have a miter track in your router table, there's another approach to cutting an end. That's to simply set up your router table fence and then use a wide backer board, as shown in the far right inset photo.

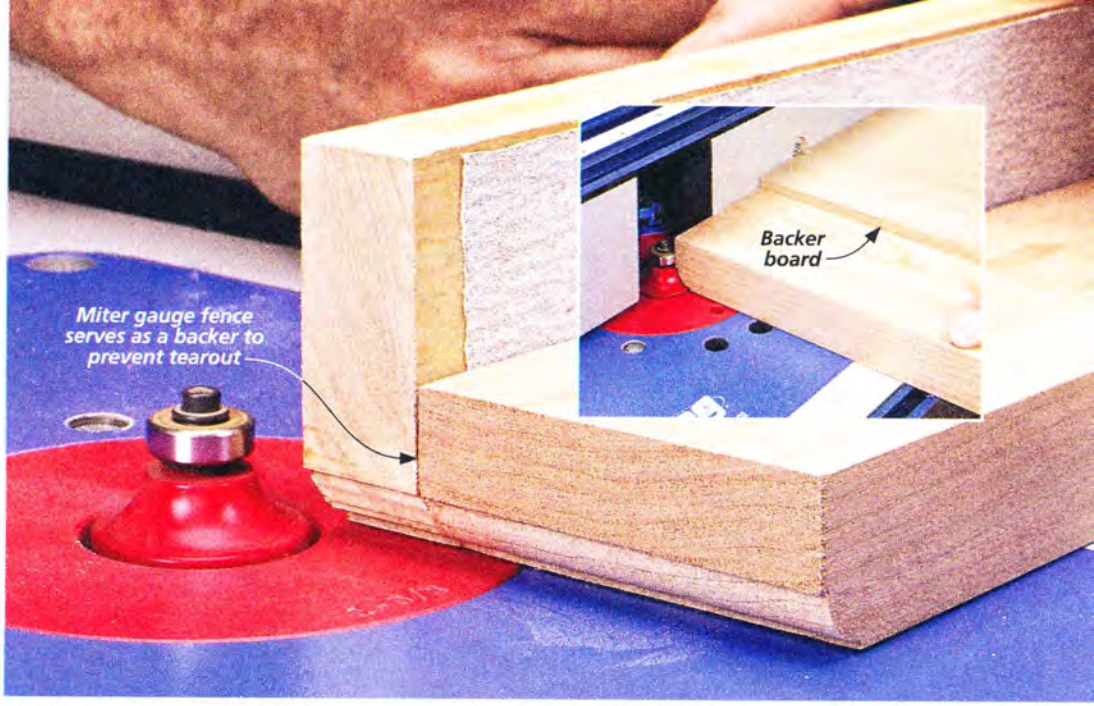


When routing the ends of pieces, you have a couple of options. One is to use a miter gauge with a wood auxiliary fence to back up the cut. The second option is to leave the fence in place just as for an edge cut. Then back up the board with a wide backer to guide it (inset photo).

The backer board is doing two jobs here. One, it provides enough surface area to allow both the workpiece and backer to bear off the fence and pass smoothly past the spinning router bit. And, of course, just like the miter gauge auxiliary fence discussed earlier, the backer board prevents the problems that often occur as a router bit exits the back edge of the workpiece.

**CURVED PARTS.** The router table fence has come into play for a lot of the cuts I've discussed to this point. However, when a workpiece is curved, you can't really use the fence to guide it or a miter gauge to support it. Fortunately, you still have a couple of options at your disposal when dealing with curved or irregularly shaped parts.

If you have a lot of curved parts that all need to be the same size, for example, a good approach is to rough-cut them on the band saw, and then trim them to match a hardboard template at the router table. This is easy to accomplish with a flush-trim bit, as indicated in the lower left photo.

Other times, a curved part may need a profile, such as a chamfer, roundover, or cove, just like any other project part. As long as the bit has a bearing, you can use the bearing to guide the workpiece around the bit, even without a fence in position.

The only problem with this is that it's often difficult to start a cut on a workpiece without using the router table fence. The point where you engage the bit can skip or chatter, damaging your workpiece. That's why a better solution is to install a starter pin in the insert plate. This pin acts as a fulcrum, allowing you to pivot the workpiece into the bit and then start routing along the bearing (lower right photo).

**GET STARTED.** Whether you're just getting started in woodworking or considering a router table upgrade, there are a lot of options available today. No tool is more versatile when it comes to creating profiles, decorative moldings, and intricate joinery. A router table can truly take your woodworking to new heights. The techniques shown here are just the tip of the iceberg when it comes to unlocking the potential of a table-mounted router. W

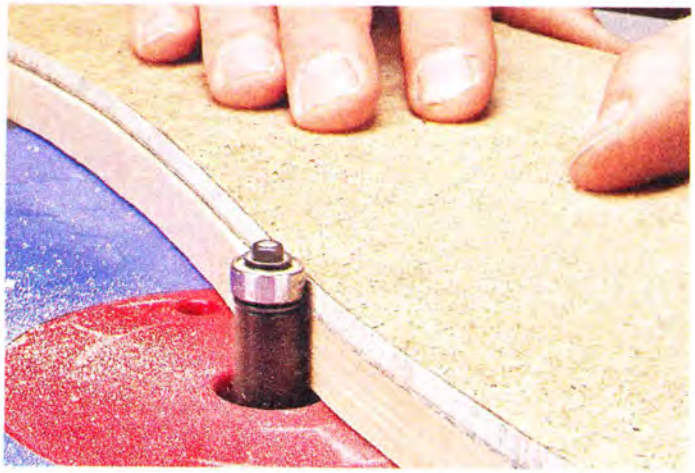

After cutting a curved part at the band saw, you can trim it to final size at the router table by attaching a hardboard template and trimming around it using a flush-trim bit.

You can rout curved pieces by guiding them along the router bit's bearing. A starter pin is useful for pivoting the board into the spinning bit in order to start the cut safely and accurately.

questions & answers

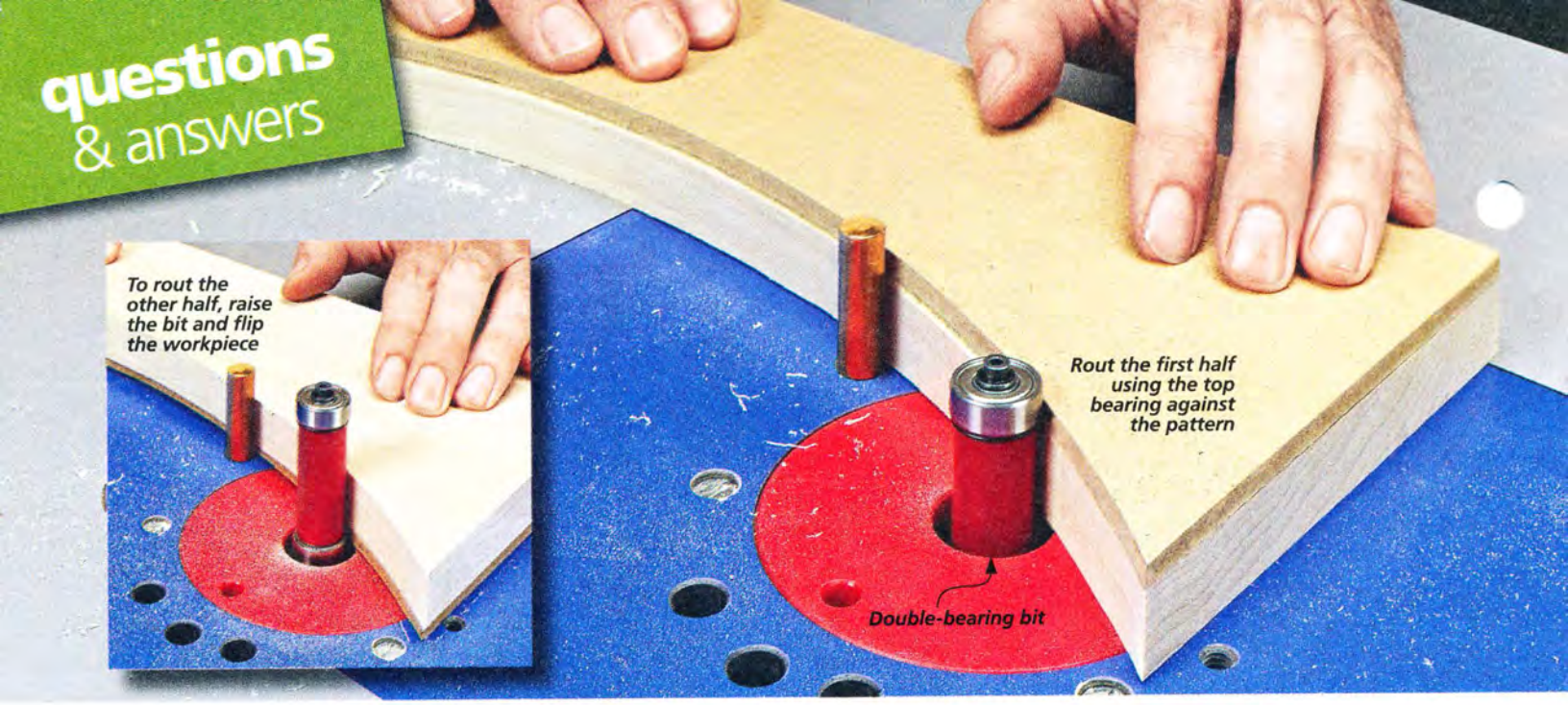


# tips & tricks for Template Routing

▲ The top and bottom bearing bit on the top right allows you to rout with your template above or below the workpiece.

**Q** *Flush trimming and template routing curved project parts never seems to work out well for me. I get tearout almost every time. Is the problem with my bit, my router, or my technique?*

*Craig Watson*
*Tampa, Florida*

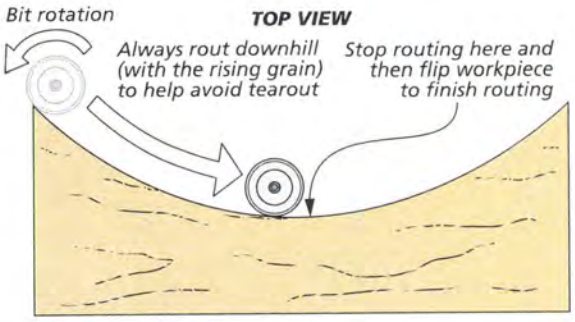


**A** Tearout can happen whenever you rout curved workpieces. And while a dull bit could be a problem, chances are it has more to do with a fast-moving router bit spinning into the grain of a curved workpiece rather than moving "downhill," or with the grain, as in the drawing above. On just about any curved workpiece, as you rout from one side to another, you're inevitably faced with routing into the grain. The result is tearout, or worse a chipped corner flying off at high speed.

**RIGHT DIRECTION.** The solution is to make sure your router is always moving with the grain. When template routing, this can be a challenge. It seems that to move forward, you must sometimes rout against the grain for at least part of the shape, just like in the drawing.

You don't want to remove the template taped to the workpiece and attempt to align it on the opposite face of the workpiece because any shift of position can ruin the piece. But you could rout one half with a flush-trim bit with a bearing at the end of the bit and then flip the workpiece and template over and rout the other with a pattern bit that has the bearing on the shank (margin photos at left).

**RIGHT BIT.** That's a lot of bit changes, though, especially if you have several of these pieces to rout. A simpler option is to use a top and bottom bearing bit. With this bit, you can flip the workpiece over and simply raise or lower the bit to match the template (photos above). This should clear up the problems you're having with tearout.

# hardware & supplies
# Sources

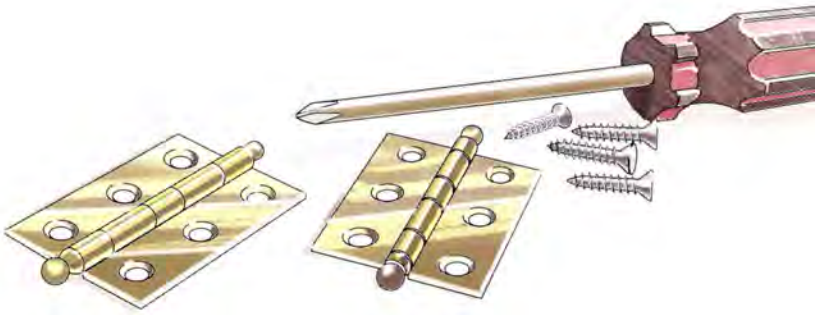

Most of the materials and supplies you'll need to build the projects are available at hardware stores or home centers. For specific products or hard-to-find items, take a look at the sources listed here. You'll find each part number listed by the company name. See the right margin for contact information.

### METALWORKING TOOLS *(p.8)*

- **Grainger**
  *Layout Fluid* . . . . . 2C945
- **Rockler**
  *100-Grit Grinding Wheel* . .74211
- **Amazon**
  *Bosch 123X Blade* . . B0000223FR

Most of the other tools you need for basic metalworking, like files, a propane torch, and a tap and die set can be found at your local hardware store.

### MITER BOXES *(p.10)*

- **Lee Valley**
  *Thin-Slot Miter Box* . . . 60F03.20
  *Razor Saw* . . . . . 60F03.12
  *Nobex Miter Box* . . . . .01H07.01

- **Lowe's**
  *Stanley Box with Saw* . . . 48795
  *Stanley Pro Miter Box* . . 27517
- **Sears**
  *Miter Box* . . . . . 00936331000

### HARDWARE JIGS *(p.12)*

- **Amazon**
  *True Position Jig* . . .B003E46SVO
- **Pro-Trades Manufacturing**
  *EZ-Jig-Doors* . . . . . .EZ 1000
  *EZ-Jig-Drawers* . . . . . .EZ 2000

### CROWN MOLDING *(p.14)*

- **MLCS**
  *1½" Crown Molding Bit* . . 7873
  *2¼" Crown Molding Bit* . . 7875
  *2¾" Crown Molding Bit* . . 7876
  *Cove Bits* . . . . . Varies

### SERVING TRAY *(p.16)*

The serving tray was finished with butcher block oil. Once it's applied, the tray cleans easily with soap and water. The oil needs to be reapplied occasionally to season the board and tray.

### TOWER BOOKCASE *(p.22)*

The bookcase was painted with three coats of *Benjamin Moore Advance* Fossil (AF-65) with a satin finish. The cap and back panel were stained with a mixture of three parts *ZAR* Cherry Stain and one part *Wood Kote Jel'd* Cherry Stain, followed by two coats of spray lacquer.

### BRIDE'S CHEST *(p.32)*

- **Sculpt Nouveau**
  *Brown Patina* . . . . . TBR08ZBR
  *Oil Finish* . . . . . OIL08ZBRN
- **Rockler**
  *60 lb. Torsion Hinges* . . . . 36275
- **Lowe's**
  *Cedar Plank Paneling* . . . .409403
- **Van Dyke's Restorers**
  *½" x 1" Clavos Nails* . .02018072

I used *Varathane's* Gunstock stain to give the chest a Craftsman look. Then I sprayed on two coats of clear lacquer. I finished by glazing the chest with *General Finishes* Java gel stain, then another coat of lacquer to seal the glaze.

### ROUTER BITS *(p.42)*

*TripleWing* router bits are available online directly from *MLCS*. *Freud Quadra-Cut* router bits can be purchased from several online retailers, including *Amazon*, *Rockler*, and *Woodcraft*.

### EDGE JOINTING *(p.44)*

- **Lie-Nielsen Toolworks**
  *No. 7 Jointer Plane* . . . . . .1-7

- **Lee Valley**
  *Bevel-Up Jointer* . . . . . 05P37.71
  *Jointer Fence* . . . . . 05P37.05

### ROUTER TABLE BASICS *(p.46)*

- **Kreg Tool**
  *Router Table System* . . . PRS1040
  *Featherboards* . . . . . PRS3020
  *Auxiliary Switch* . . . . . PRS3100
- **MLCS**
  *U-Turn Router Lift* . . . . . 9563

Get the all-new Season 7 DVD set of the *Woodsmith Shop*! The set includes two DVDs with all the episodes plus a CD-ROM with bonus plans and articles. Collect the entire series by ordering individual seasons for $29.95 or save with package deals. Learn more at Woodsmith.com!
DVD Set: Season 7 . . . . . $29.95

## MAIL ORDER SOURCES

*Project supplies may be ordered from the following companies:*

**Woodsmith Store**
**800-444-7527**

**Rockler**
**800-279-4441**
**rockler.com**

**Amazon**
**amazon.com**

**Grainger**
**800-472-4643**
**grainger.com**

**Kreg Tool**
**800-447-8638**
**kregtool.com**

**Lee Valley**
**800-871-8158**
**leevalley.com**

**Lie-Nielsen Toolworks**
**800-327-2520**
**lie-nielsen.com**

**Lowe's**
**877-465-6937**
**lowes.com**

**MLCS**
**800-533-9298**
**mlcswoodworking.com**

**Pro-Trades Manufacturing**
**810-245-5599**
**ezjig.com**

**Sears**
**800-697-3277**
**sears.com**

**Van Dyke's Restorers**
**800-558-1234**
**vandykes.com**

**Sculpt Nouveau**
**800-728-5787**
**sculptnouveau.com**

**Woodcraft**
**800-225-1153**
**woodcraft.com**

For a current list of updates or revisions to past issues, please visit woodsmith.com/magazine/updates.

# **looking** inside
# Final Details

*Serving Tray.* This handy serving tray incorporates a separate cutting board. It's perfect for entertaining or just a late-night snack. Best of all, you can build it in a weekend. To learn how it's made, turn to page 16.

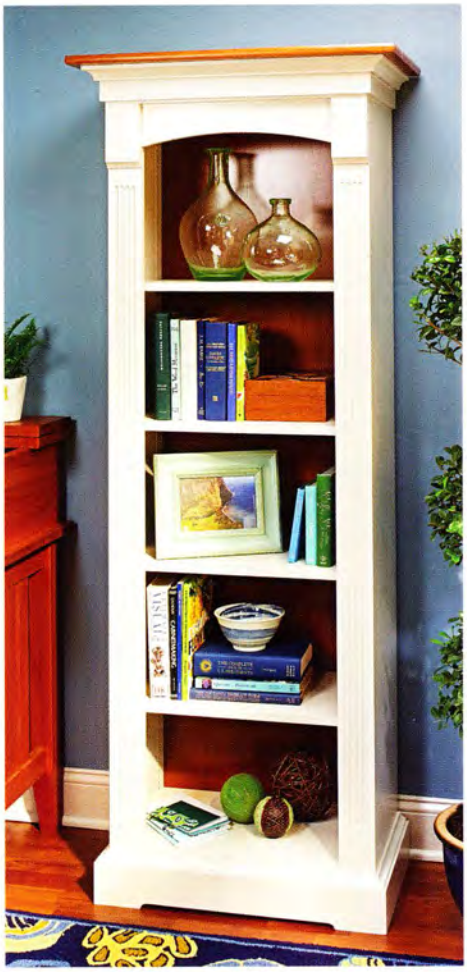

*Tower Bookcase.* Fluted columns and a gentle arc in the top rail are two of the elements that give this bookcase a unique look. You'll find complete plans on page 22.

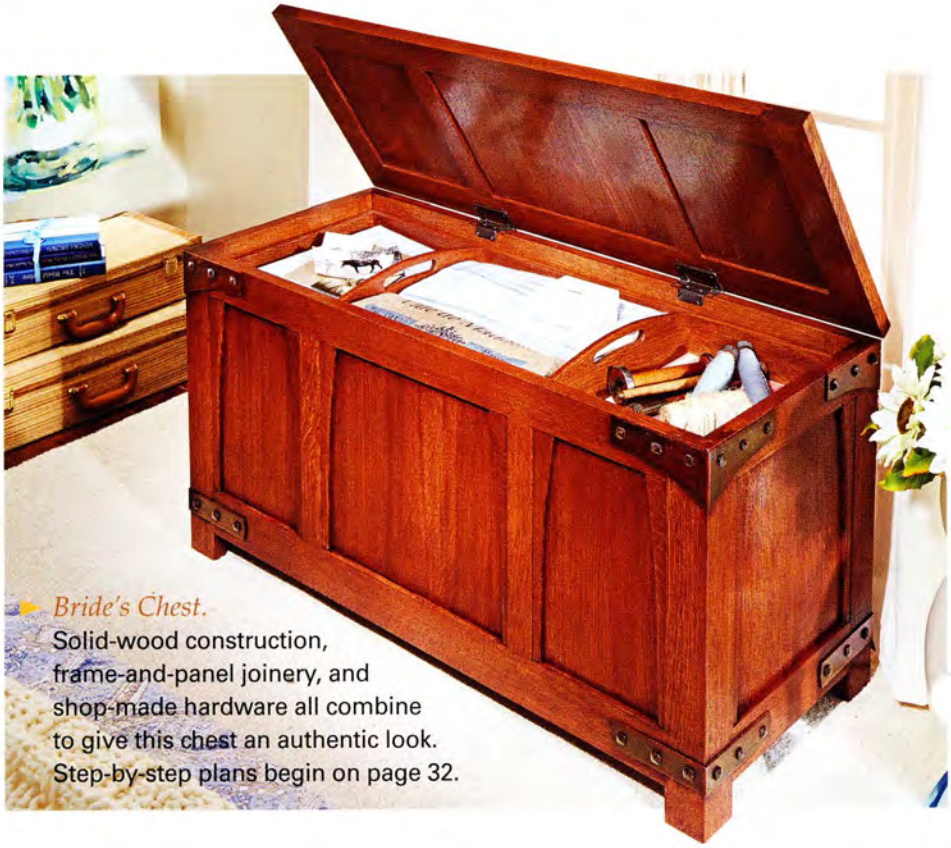

*Bride's Chest.* Solid-wood construction, frame-and-panel joinery, and shop-made hardware all combine to give this chest an authentic look. Step-by-step plans begin on page 32.